COMINOX
Via Viganò, 7
20048 CARATE BRIANZA
Milano (Italy)
Phone: +39 0362.91.23.12
Fax: +39 0362.90.09.40
www.cominox.com
e-mail: comm@cominox.it

OPERATING AND MAINTENANCE INSTRUCTIONS

AUTOCLAVE
Sterilizer
STERILCLAVE® 18/24

Document code: UCG08824

Mod.
18 S
18 B
18 BHD

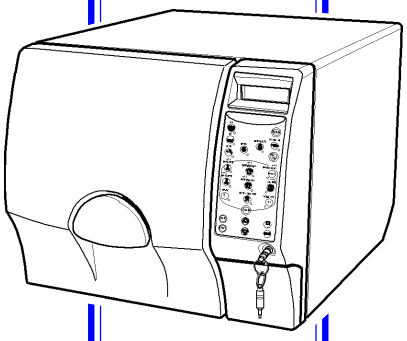

Mod.
24 S
24 B
24 BHD

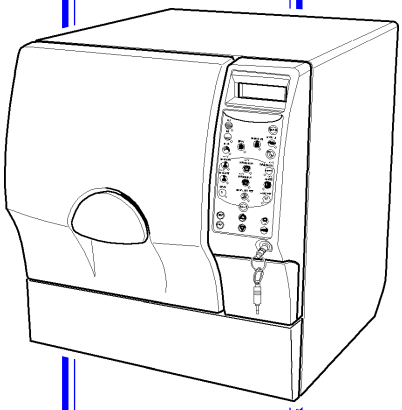

FOREWORD

The present operating instructions are integral to the unit. They are to be kept within reach and constantly used by people profiting and operating the unit itself. The operating instructions are always to come with the unit, when the unit is sold to a different user too.

Any operator is liable to read the operating instructions and strictly comply with its instructions and information as **COMINOX** is not liable at all for any damage to people or things or to the unit, should the operator not comply with the hereby described general operating conditions.

Such instructions are confidential and the customer is liable not to disclose any information to third parties. What is more such operating instructions and its annexes can not be changed, tampered, modified, violated, copied or sold to anybody without **COMINOX** approval.

The present document belongs to COMINOX. It can not be copied or sold to anybody without COMINOX informed approval.

INDEX

INTRODUCTION 1
FOREWORD 1
INDEX 2
References numerical index 3
Graphical reference representation Mod. 18S - 18B - 18BHD 4
Graphical reference representation Mod. 24S - 24B - 24BHD 5
References analytical index 6
GENERAL SUPPLY CONDITIONS 7
DOCUMENT SCOPE 7
Annexe list 8
PERSONNEL DEMANDED QUALIFICATIONS 8
OPERATING USE 9
Cycle/sterilising material table Mod. 18B/BHD e 24B/BHD 10
Cycle/sterilising material table Mod. 18S - 24S 11
SPECIAL CYCLE 13
Parameters to be programmed 13
TEST CYCLES 13
TECHNICAL SPECIFICATIONS 14
Technical specifications table 14
Reference standards 14
Identification and marking 15
General dimensions 15
ACCIDENT PREVENTION 16
GENERAL SAFETY CONDITIONS 16
Thermal danger 16
Noise 17
Environmental conditions and risks 17
Residual risk table 17
TRANSPORTATION and PACKAGING 18
GENERAL CONDITIONS 18
Unpacking and unit cleaning 19
Storage 19
INSTALLATION 20
GENERAL CONDITIONS 20
Setting 20
CONNECTIONS 22
Electrical connections 22
Water connection 22
1) Water self charge 22
2) Direct drain 22
Water supply table 23
CLEAN WATER TANK MANUAL CHARGE 23
TANK MANUAL DRAIN 24
BUILT-IN SETTING 24
INSTRUMENTS 25
CONTROL PANEL 25
OPERATION 27
GENERAL CONDITIONS 27
START-UP 27
Stand-by 27
Settings 28
Preparation of the load to be sterilised 29
Selection of the sterilisation cycle 29

SPECIAL cycle programming 29
FIRST CYCLE Start-up 30
Sterilising cycle stop 31
SUBSEQUENT sterilising cycle start-up. 32
Printer (OPTIONAL) 33
SELF AUTOMATIC SHUTOFF 33
CONTROL TEST 33
BOWIE & DICK Test 33
VACUUM Test 34
TROUBLESHOOTING 35
SIGNALLING / ALARMS 35
Signalling 35
Alarms and troubleshooting 36
Alarm list codes 38
SERVICE 39
GENERAL CONDITIONS 39
Cleaning 40
Filters 40
Controls 40
STORAGE AND DISPOSAL 41
Unit storage or long-term stop 41
Disposal and Scrapping 41
SCHEDULED SERVICE TABLE 42

References numerical index

01, tray handle 8, 16
02, waste pipe 8, 24
03, supply cable 8, 22, 37
04, trays 8, 14, 15, 16, 29, 33
05, metering funnel 8, 21, 23
06, access keys 8, 26, 29, 34, 35
07, envelope holder 14, 29
08, tray support 8, 14, 21, 29
09, chamber9, 13, 14, 15, 16, 21, 27, 29, 31, 32, 34, 35, 36, 37, 40
10, clean water tank 14, 18, 22, 23, 24, 25, 37, 40
11, waste water recovery tank14, 18, 22, 23, 24, 35, 40
12, safety valve 14, 38
13, cut-out switch 27, 33, 34, 37
14, filler 23
15, air sterilising filter 31, 37, 38, 40
16, door16, 18, 21, 24, 25, 27, 29, 32, 33, 34, 35, 36, 37, 40
17, safety thermostat 16
18, printing door 32, 33
19, coil covering grid 21
20, waste filter 21, 37, 40
21, chamber probe 21
22, adjustable feet 21
23, lifting belts 18, 19
24, clean water tap 24
25, waste water tap 24
26, printer 8, 26, 28, 32, 33, 35
27, level testing pipe 8, 21
28, grid seal 8, 21
29, water self charge 8, 14, 22, 35, 38
30, direct waste drain 8, 14, 22
31, chamber seal 36, 37, 40
32, fuses 37

Graphical reference representation Mod. 18S - 18B - 18BHD

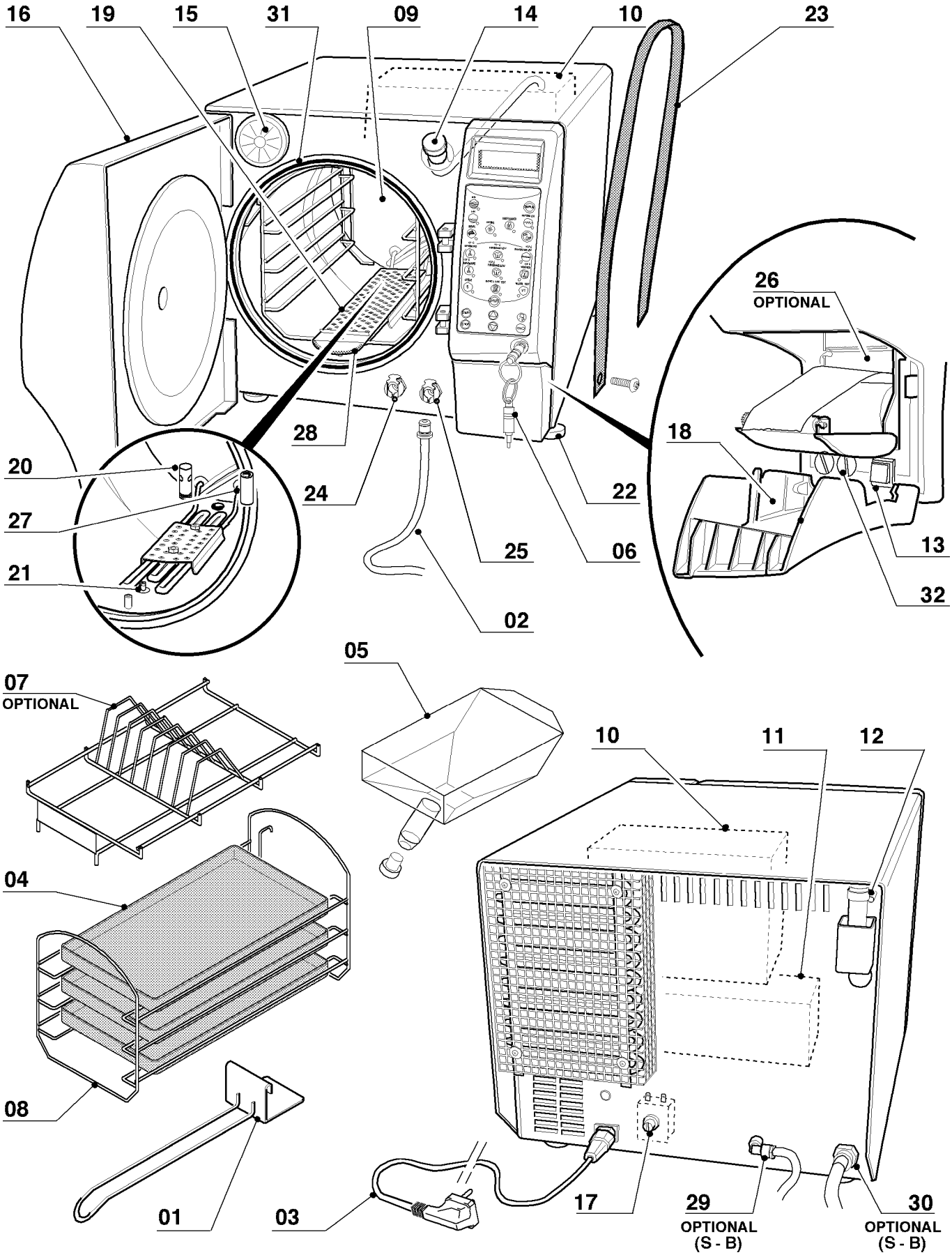

Graphical reference representation Mod. 24S - 24B - 24BHD

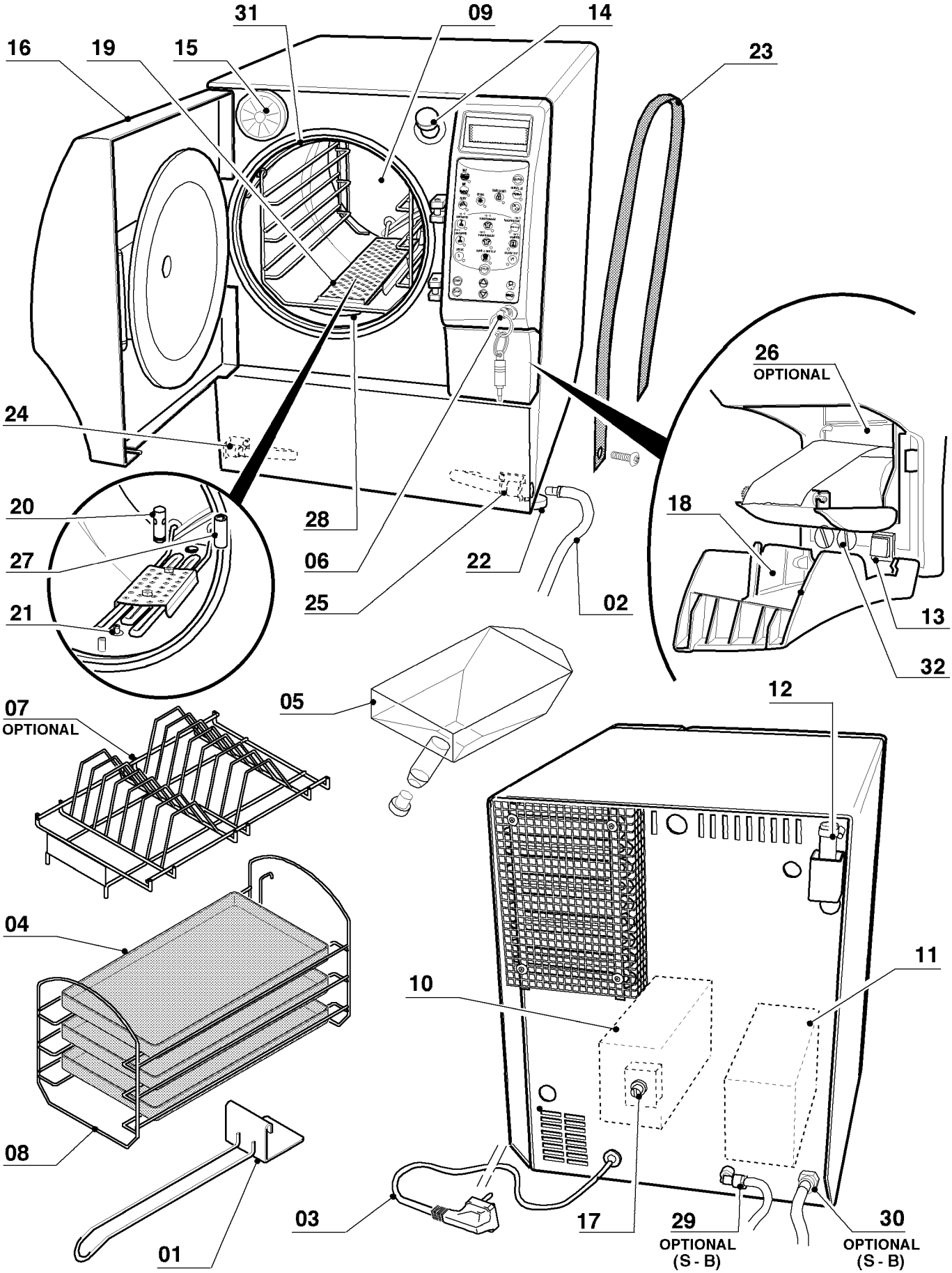

References analytical index

A

access key 06 33
access keys 06 ..... 8, 26, 29, 34, 35
adjustable feet 22 21
air sterilising filter 15 ..... 31, 37, 38, 40

B

BOWIE & DICK test 33

C

chamber 09
9, 13, 14, 15, 16, 21, 27, 29, 31, 32, 34, 35, 36, 37, 40
chamber probe 21 21
chamber seal 31 ..... 36, 37, 40
clean water tank 10 ..... 14, 18, 22, 23, 24, 25, 37, 40
clean water tap 24 24
coil covering grid 19 21
cut-out switch 13 ..... 27, 33, 34, 37

D

direct waste drain 30 ..... 8, 14, 22
dismantling 7
door 16
16, 18, 21, 24, 25, 27, 29, 32, 33, 34, 35, 36, 37, 40

E

emergency 26
envelope holder 07 ..... 14, 29
environmental conditions 7

F

filler 14 23
first charge 23
fuses 32 37

G

grid seal 28 ..... 8, 21

H

heat emission 14
heat emissions 24
heated surfaces 16

I

incorrectly operate 9

K

key, access 06 33

L

level testing pipe 27 ..... 8, 21
lifting belts 23 ..... 18, 19

M

manual tank drain 18
metering funnel 05 ..... 8, 21, 23

N

nameplates 16
noise 17

O

operators 8

P

personal protection means 8
power supply 14, 20
printer 26 ..... 8, 26, 28, 32, 33, 35
printing door 18 ..... 32, 33

S

safety thermostat 17 16
safety valve 12 ..... 14, 38
SPECIAL cycle 13
sterilise 9
supply cable 03 ..... 8, 22, 37

T

tray handle 01 ..... 8, 16
tray support 08 ..... 8, 14, 21, 29
trays 04 ..... 8, 14, 15, 16, 29, 33

V

VACUUM TEST 34

W

waste filter 20 ..... 21, 37, 40
waste pipe 02 ..... 8, 24
waste water recovery tank 11 14, 18, 22, 23, 24, 35, 40
waste water tap 25 24
water self charge 29 ..... 8, 14, 22, 35, 38
weather conditions 17
weight 14

GENERAL SUPPLY CONDITIONS

COMINOX hereby declares that the unit complies with any standard and regulation in force within the European Union and provides for the hereby enclosed CONFORMITY DECLARATION.

COMINOX accepts and undertakes to check and repair possible manufacturing defects appearing **within 24 months** from the unit installation (refer back to the guarantee). The *chamber **09*** is guaranteed for 10 years.

The customer is liable for using original spare parts and for fitting them according to their forecast use and operation.
Reference manufacturers are liable for any fitted accessory.

COMINOX is not liable for defects or wrong operation depending on the unit incorrect use, changes after transportation or specific *environmental conditions*; missing or incorrect maintenance, tapering or incorrect repairing.

COMINOX is not liable in the case the installation is not compliant with the hereby enclosed instructions or if not be carried out by duly trained and qualified personnel.

COMINOX IS NOT liable for disposal of the unit transportation or operation or production materials: packaging, waste water, lubricants, etc.. The customer is individually liable according to the specific regulations and standards in force in each single installation country, for disposing of any potentially dangerous substance, and of any harmful and non-ecologic or environmental friendly substance.
The same apply to the unit *dismantling*

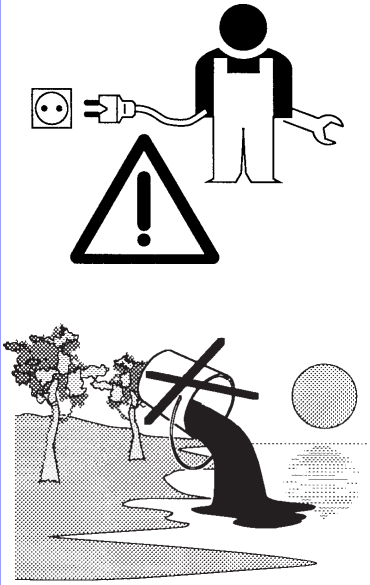

DOCUMENT SCOPE

The operating instructions (OPERATING AND MAINTENANCE INSTRUCTIONS) are only to be considered a reference to safely operate the unit or to carry out any maintenance as to keep the unit under consistent general conditions.

Instructions and information within the operating instructions do not replace at all any safety standard and technical data relating to installation or operation, directly fitted to the unit as well a any common sense rules or safety standard in force within each single country.

Any professional working on the unit is liable for reading the operating and maintenance instructions; they are to be informed on residual risks depending on the unit operation or sterilised products.

Annexe list

Besides the operating and maintenance instructions, the unit comes with:

(STANDARD Supply ●)

MODEL	N°	18S 24S	18B 24B	18BHD 24BHD
Guarantee certificate	1	●	●	●
EC Conformity declaration	1	●	●	●
Tray handle ***01***	1	●	●	●
Waste pipe ***02***	1	●	●	●
Level testing pipe ***27***	1	●	●	●
Grid seal ***28***	1	●	●	●
Supply cable ***03***	1	●	●	●
Trays ***04***	3	●	●	●
Tray support ***08***	1	●	●	●
Metering funnel ***05*** with cover	1	●	●	●
Access keys ***06***	2	●	●	●
Printer ***26***	1	Optional	Optional	Optional
Water self charge ***29***	1	Optional	Optional	●
Direct waste drain ***30***	1	Optional	Optional	●

PERSONNEL DEMANDED QUALIFICATIONS

Operators in charge of the unit operation and maintenance are to be trained, aware and informed of any activity and skilled enough to correctly interpret what specified in the present operating instructions and to provide for safe and accurate controls.

Even though it is not possible to provide for any information required and targeted to the different unit operations, any operator must at least be qualified and trained for the activity and the role he plays.

Operators directly working on the unit are to wear any required personal protection means: gloves to be protected against cutting or pointed objects or from heat.

It is absolutely forbidden to employ unskilled, non qualified, alcohol-addict or drug-addict operators.

It is not possible to check training and/or train operators working on each single unit, according to the operator role within the company, each single operator is to be qualified enough and he is liable for any risk depending on his specific activity and job.

OPERATING USE

It is absolutely forbidden to use the unit or its parts for different reasons and operations from what hereby detailed described.

It is absolutely forbidden to incorrectly operate the unit or to operate the unit differently from what specified in the operating use chapter.

The unit was designed to:

STERILISE
SURGICAL, DIAGNOSTIC OR MEDICAL INSTRUMENTS IN AN AUTOCLAVE SUCH AS: SCISSORS, CUTTERS, KNIVES, GAUZES, ETC...

The material and composition of any product to be sterilised in an autoclave can be varied: stainless steel, glass, rubber, plastics, cotton pads, fabrics in general.
Products to be sterilised in an autoclave are divided into solid instruments (for example: knives), hollow instruments (for example surgical suction cannula) and porous loads (for example: fabrics and gauzes).
The most suitable sterilising cycle is to be chosen following instructions in the **Cycle/ sterilising material Table**.
It is also possible to sterilise LIQUIDS (for example culture soils), through the cycle SPECIAL. Taking into account that the SPECIAL cycle is not covered by technical information and requirements in the EN13060 standard as well as that LIQUIDS are not considered within the standard scope, of the standard,such a cycle is protected by an access key both in case of selection and operating parameter change.

*Always check that the thermal resistance value of the product to be sterilised is higher than the programmed cycle temperature value, mainly taking into account that **COMINOX** is liable for the maximum temperature to be measured in chamber **09**, under consistent operating conditions, which accounts for: PROGRAMMED STERILISING TEMPERATURE + 3 °C (in compliance with pr EN13060 instructions): Minimum temperature = sterilising temperature 0 °C; maximum temperature = sterilising temperature +4 °C).*

Strictly comply with instructions and information relating to sterilisation specified by the manufacturer of any material to be sterilised.

Instruments and fabrics to be sterilised MUST be accurately washed, rinsed with water with no additives and dried. The loading support too is to be perfectly dry.

Comply with the maximum total load weight.
Use the loading support system supplied by **COMINOX** (refer back to Preparation of the load to be sterilised). Should different loading supports be used from the standard supplied loading support, steam penetration and drying performances validated during certification tests are not guaranteed.
Follow instructions as far as correct packaging is concerned and only use packaging materials compliant with EN868 standard.

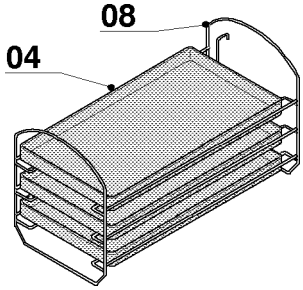

The unit can NOT be operated or installed in specific areas at the presence of gas or any other explosive volatile substance.

Cycle/sterilising material table Mod. 18B/BHD e 24B/BHD

Material to be sterilised in an autoclave:	CYCLE						Max. weight Total load kg Models		Minimum time Total cycle Minutes Models			Maximum time Total cycle Minutes Models		
	N	B	B	N	B	S1								
	121°C	121°C	134°C	134°C	134°C	134°C								
			PRIONS				18 B BHD	24 B BHD	18 B	18 BHD	24 B	24 BHD	18 B	18 BHD	24 B	24 BHD
Solid instruments in rubber, plastics, glass only, unpacked.	●						5	7,5	23	24	21	30	29	28
Type **A** hollow instruments in rubber, plastics, packed and unpacked.		●					2,5	3,7	57	65	60	68	77	71
Delicate hollow loads (for example fabrics), packed or unpacked.		●					1,5	2,2	57	65	60	77	87	79
Unspecific solid and type **A** hollow instruments, infected by BSE infectious agents, packed or unpacked.			●				2,5	3,7	63	73	66	75	85	80
Unspecific hollow loads (for example fabrics) infected by BSE infectious agents, packed or unpacked.			●				1,5	2,2	63	73	66	85	95	88
Solid instruments in stainless metal only, unpacked.				●			5	7,5	13	13	11	21	20	19
Stainless metal type **A** hollow instruments, packed or unpacked.					●		2,5	3,7	49	59	49	60	71	66
Hollow loads (for example: fabrics), packed or unpacked.					●		1,5	2,2	49	59	49	69	81	73
Solid stainless metal instruments, packed or unpacked.						●	3	4	37	44	37	48	54	49

NOTES:

CYCLE N: sterilising cycle targeted to unpacked solid instruments only.

CYCLE S1: sterilising cycle targeted to packed and unpacked solid instruments.

CYCLE S2: sterilising cycle targeted to packed or unpacked solid instruments, type B hollow or porous loads.

CYCLE B: sterilising cycle targeted to packed and unpacked solid instruments, type A, typeB hollow or porous loads. Double packaging too.

TYPE A HOLLOW LOADS: instruments fitted with an open cavity on one side only, whose length to cavity diameter ratio accounts for or it is higher than 1 and it accounts for or it is lower than 750 ($1 \leq L/D \leq 750$), whose cavity length is lower than 1500 mm ($L \leq 1500$ mm). Instruments fitted with an open cavity on both sides whose length to cavity diameter ratio account for or it is higher than 2 and it accounts for or it is lower than 1500 ($2 \leq L/D \leq 1500$), whose cavity

Cycle/sterilising material table Mod. 18S - 24S

Material to be sterilised in an autoclave:	CYCLE						Max. weight Total load kg		Minimum time Total cycle Minutes		Maximum time Total cycle Minutes	
	N	S2	S2	N	S2	S1						
	121°C	121°C	134°C	134°C	134°C	134°C	Models		Models		Models	
			PRIONS				18 S	24 S	18 S	24 S	18 S	24 S
Solid instruments in rubber, plastics, glass only, unpacked.	●						5	7,5	24	23	29	29
Type **B** hollow instruments in rubber, plastics, packed and unpacked.		●					2,5	3,7	64	69	75	80
Delicate hollow loads (for example fabrics), packed or unpacked.		●					1	1,5	63	69	75	82
Unspecific solid and type **B** hollow instruments, infected by BSE infectious agents, packed or unpacked.			●				2,5	3,7	69	74	79	85
Unspecific hollow loads (for example fabrics) infected by BSE infectious agents, packed or unpacked.			●				1	1,5	69	74	79	85
Solid instruments in stainless metal only, unpacked.				●			5	7,5	14	13	19	19
Stainless metal type **B** hollow instruments, packed or unpacked.					●		2,5	3,7	55	60	64	72
Hollow loads (for example: fabrics), packed or unpacked.					●		1	1,5	55	60	64	71
Solid stainless metal instruments, packed or unpacked.						●	3	4	49	54	59	61

length is lower than 3000 mm (L ≤ 3000 mm).

TYPE B HOLLOW LOADS: instruments fitted with an open cavity one side only, whose length to cavity diameter ratio accounts for or it is higher than 1 or it accounts for or it is lower than 5 (1 ≤ L/D ≤ 5) and whose cavity diameter accounts for or is higher than 5 mm (D ≥ 5 mm); or instruments fitted with a cavity on both sides , whose length to cavity diameter ration accounts for or it is higher than 1 or it accounts for or it is lower than 10 (2 ≤ L/D ≤ 10) and whose cavity diameter accounts for or is higher than 10 mm (D ≥ 5 mm) .

MAXIMUM TOTAL LOAD WEIGHT: the maximum admitted weight for each load described category, including the loading support system and its packaging.

CYCLE TOTAL MAXIMUM TIME: the total time an autoclave requires to carry out a complete cycle, including cold unit start-up (room temperature) and maximum load.

CYCLE TOTAL MINIMUM TIME: the total time an autoclave requires to carry out a complete cycle, including hot start-up (one cycle after the other) and minimum load (load support only).

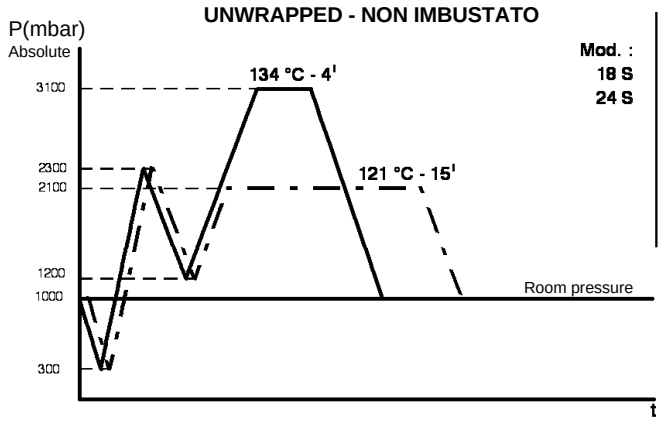
UNWRAPPED - NON IMBUSTATO
P(mbar)
Absolute
3100
2300
2100
1200
1000
300
134 °C - 4'
121 °C - 15'
Room pressure
t
Mod. :
18 S
24 S

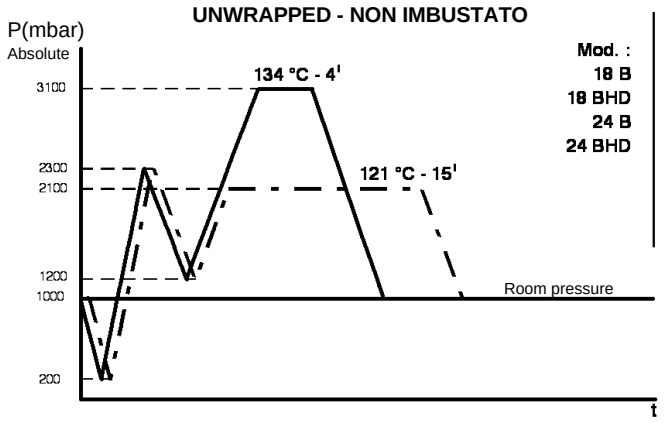
UNWRAPPED - NON IMBUSTATO
P(mbar)
Absolute
3100
2300
2100
1200
1000
200
134 °C - 4'
121 °C - 15'
Room pressure
t
Mod. :
18 B
18 BHD
24 B
24 BHD

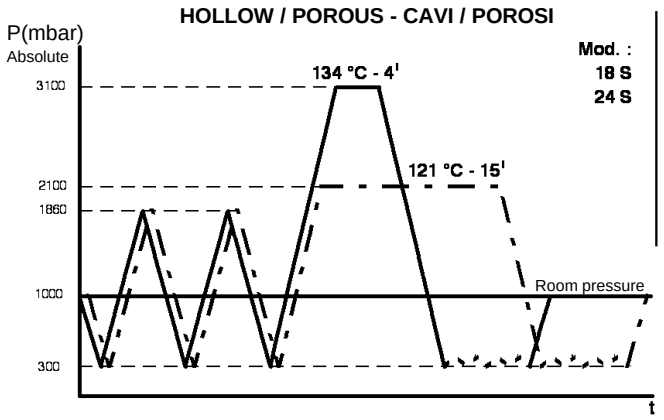
HOLLOW / POROUS - CAVI / POROSI
P(mbar)
Absolute
3100
2100
1860
1000
300
134 °C - 4'
121 °C - 15'
Room pressure
t
Mod. :
18 S
24 S

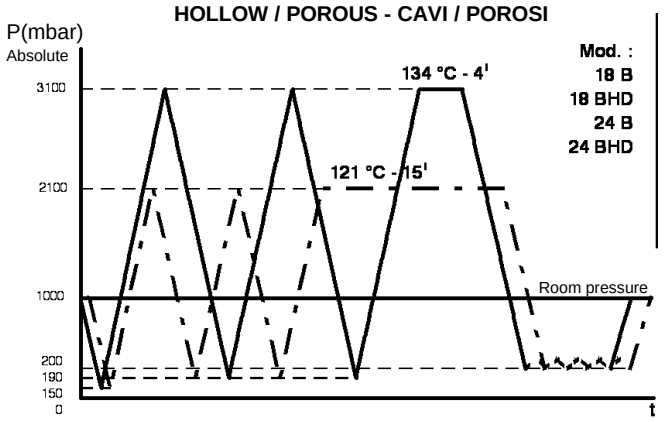
HOLLOW / POROUS - CAVI / POROSI
P(mbar)
Absolute
3100
2100
1000
200
190
150
0
134 °C - 4'
121 °C - 15'
Room pressure
t
Mod. :
18 B
18 BHD
24 B
24 BHD

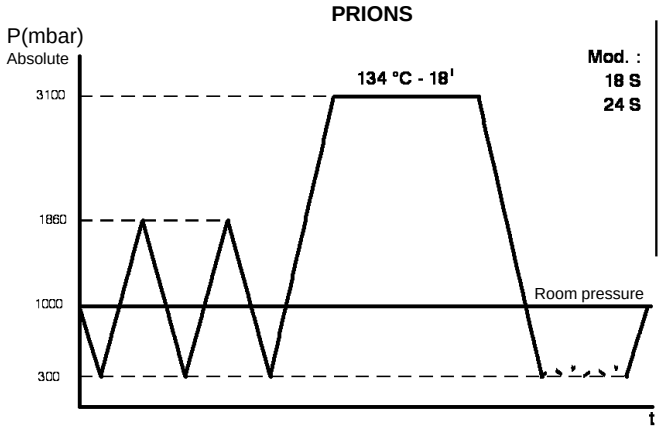
PRIONS
P(mbar)
Absolute
3100
1860
1000
300
134 °C - 18'
Room pressure
t
Mod. :
18 S
24 S

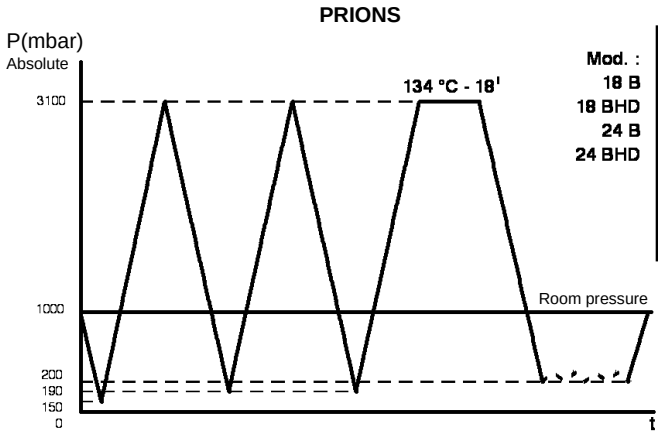
PRIONS
P(mbar)
Absolute
3100
1000
200
190
150
0
134 °C - 18'
Room pressure
t
Mod. :
18 B
18 BHD
24 B
24 BHD

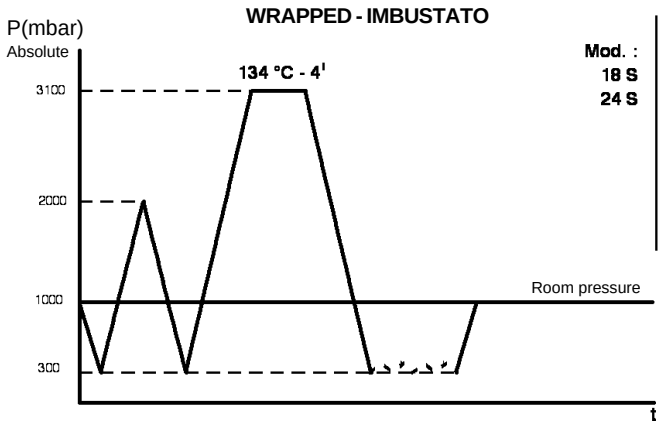
WRAPPED - IMBUSTATO
P(mbar)
Absolute
3100
2000
1000
300
134 °C - 4'
Room pressure
t
Mod. :
18 S
24 S

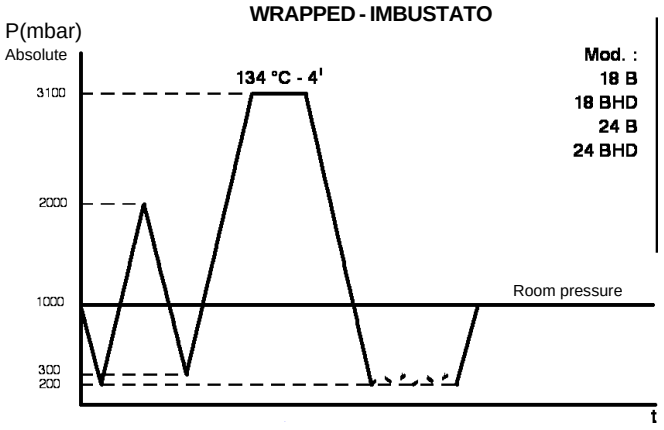
WRAPPED - IMBUSTATO
P(mbar)
Absolute
3100
2000
1000
300
200
134 °C - 4'
Room pressure
t
Mod. :
18 B
18 BHD
24 B
24 BHD

SPECIAL CYCLE

It is a unique sterilisation cycle whose temperature and sterilising time, drying and number of vacuum pulse peaks parameters can easily programmed by the user.

Parameters to be programmed

- STERILISING TEMPERATURE: 117 °C to 134 °C
- STERILISING TIME: MIN (refer back to table) MAX = 30 minutes
- DRYING: 0 (EXCLUDED) to 30 MINUTES (EXCLUDED WITH LIQUIDS)
- N. OF VACUUM PULSE PEAKS: 1 TO 3 (ZERO PEAKS IN THE CASE OF LIQUIDS)

Table: sterilising temperature/minimum time

Temperature °C	Minimum time in minutes	Temperature °C	Minimum time in minutes
117	23	126	9
118	22	127	8
119	19	128	7
120	17	129	6
121	15	130	6
122	14	131	5
123	12	132	5
124	11	133	4
125	10	134	4

When programming the SPECIAL cycle, LIQUIDS can be sterilised too. It is thus demanded to automatically cut drying and enforce a vacuum pulse after pre-vacuum, thus simply programming sterilising temperature and time. Such a feature, during sterilising, does not allow steam to come out from the chamber **09** until temperature lowers under a safety value protecting liquids within their containers, both open and closed (with no risk of boiling or container breaking).
The SPECIAL cycle can be alternated to standard cycles as in the sterilising cycle/ material table and can be programmed according to specific sterilising requirements for unique instruments or loads (for example liquids). As already pointed out, the SPECIAL cycle does not comply with any technical requirements in the prEN13060 standard, which any other ***COMINOX*** autoclave complies with. That is the very reason why the SPECIAL cycle can used by qualified laboratory personnel only. Such operators, authorised by the sterilising manager to get the supplied access key, must validate (in compliance for example with EN554 standard) any programmed cycle on a specific reference load.

TEST CYCLES

BOWIE & DICK TEST	STEAM PENETRATION TEST	EMPTY
VACUUM TEST	HYDRAULIC CIRCUIT TIGHTENING TEST	CHAMBER

Technical specifications table

(STANDARD Supply ●)

STERILCLAVE® Models	U.M.	18S (24S)	18B (24B)	18BHD (24BHD)
Possibly built-in		●	●	●
Thermal printer, 40 columns		Optional	Optional	Optional
Water self charge ***29***		Optional	Optional	●
Direct waste drain ***30***		Optional	Optional	●
Chamber ***09*** capacity	litres	17,15 (23,15)	17,15 (23,15)	17,15 (23,15)
Clean water tank ***10*** capacity	litres	2,1 (3,1)	2,1 (3,1)	2,1 (3,1)
Waste water recovery tank ***11*** capacity	litres	2,1 (3,1)	2,1 (3,1)	2,1 (3,1)
Water consumption per cycle (minimum)	cm^3	180 (420)	210 (420)	210 (420)
Water consumption per cycle (max) – Minimum water charge	cm^3	500 (990)	700 (1040)	700 (1190)
Absolute operating pressure (maximum)	kPa	330	330	330
Power supply voltage and frequency	V/Hz	Volt 230~ Hz 50 / 60		
Admitted maximum voltage changes	Volt	± 10%		
Maximum absorbed power	Watt	2000 (2800)	2000 (2800)	2000 (2800)
Heat emission	Joule/h	0,3		
Weight (mass)	kg	48,7 (62)	51 (63)	51 (68)
Loading support system weight				
Trays ***04***	g	150 x 3 (335 x 3)		
Envelope holder ***07*** (optional)	g	300 (430)		
Tray support ***08***	g	480 (630)		
Admitted room temperature	°C	+15°C to +35°C		
Admitted maximum relative humidity	%	85% (5 to 40°C)		
Admitted maximum altitude. (with a standard *safety valve* ***12***)	m	up to 1500 sea-level	up to 2000 sea-level after replacing the safety valve	
Admitted maximum production time (with no stops)	h	23,5 hours		

Reference standards

The unit was designed in compliance with the following standards:

93/42/CE	Medical device directive class 2A;
89/336/CE	Electromagnetic compatibility directive;
73/23/CE	Low tension directive;
97/23/CE	Pressure Equipment Directive (PED);
EN 13060	Small steam sterilizers;
EN 61010-1	Safety instructions for any laboratory device .....
EN 61010-2-041	Instructions for autoclaves destined to the medical sector .....

Identification and marking

Nameplates on the unit ARE NOT to be removed, damaged, dirtied, hidden, etc… Nameplates are to be periodically cleaned, kept visible at sight, NEVER hidden with foreign objects or pieces.

Technical data in the operating instructions do not replace data on the nameplates fitted onto the unit. The data nameplate is fitted to the unit back.

General dimensions

General dimensions

Sterilclave® 18	**Sterilclave® 24**
A = 640 mm	A = 700 mm
B = 445 mm	B = 445 mm
C = 390 mm	C = 470 mm

*Dimensions of the chamber **09***

Sterilclave® 18	**Sterilclave® 24**
D = 251 mm	D = 251 mm
E = 330 mm	E = 451 mm

Dimensions required when the unit is to be built-in

Sterilclave® 18	**Sterilclave® 24**
F = 520 mm	F = 580 mm
G = 450 mm	G = 450 mm
H = 395 mm	H = 475 mm

NEVER lean the unit onto soft surfaces (for example cloth or foam) and never remove the adjustable feet. Leave about 20 mm for aeration in the back. When built-in in a unit, 20 mm more are required between the unit and the wall. The furnishing unit is to be easily opened on the back for aeration, as in the picture.

*Dimensions of the trays **04***

Sterilclave® 18	**Sterilclave® 24**
X = 185 mm	X = 185 mm
Y = 285 mm	Y = 420 mm
Z = 3x50 mm	Z = 3x50 mm

*Useful loading dimensions with an empty chamber **09***

Sterilclave® 18	**Sterilclave® 24**
O = 226 mm	O = 226 mm
P = 305 mm	P = 425 mm

ATTENTION: under any conditions, the unit charge should never lean against the chamber 09 walls.

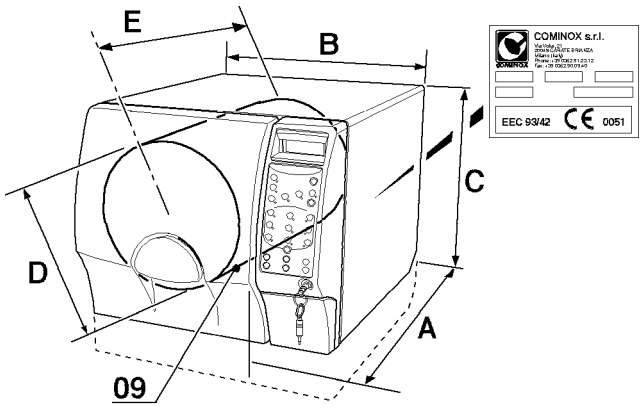

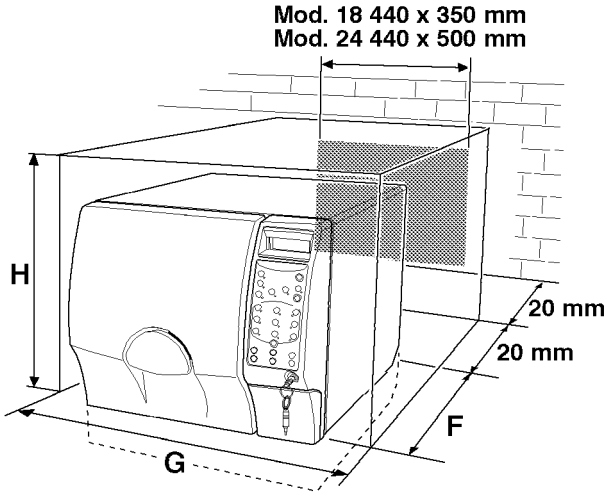

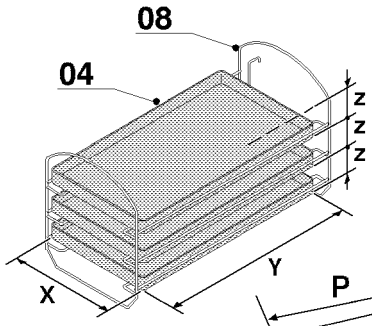

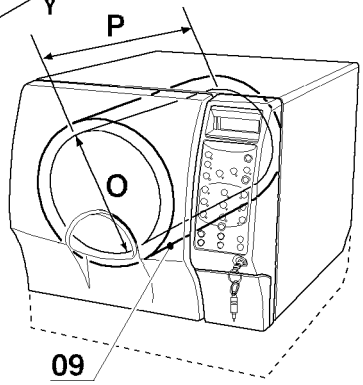

GENERAL SAFETY CONDITIONS

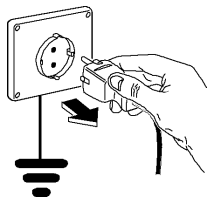

Any operation, different from the operating cycle, is to be carried out when the unit is cut from the main power supply. The main power supply is to be fitted with the required grounding.

What is more operators are to be correctly informed.
It is compulsory for them to read the comply with any technical information in the present operating and maintenance instructions and in the enclosed documents

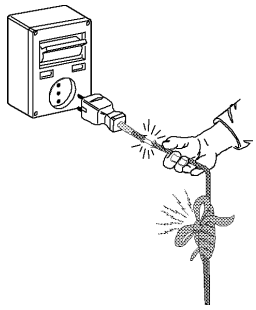

Avoid any unsafe repairing. Any repairing is to be carried out with original spare parts only, to be fitted according to their specific use.
Never remove any part from the unit.
Only authorised and previously trained personnel by **COMINOX** can remove the exterior protection cover and access the interior parts.

Nameplates on the unit are not to be removed, damaged or dirtied. They are to be kept clean and perfectly readable.

Refrain from using the unit in case of troublesome or abnormal operation.

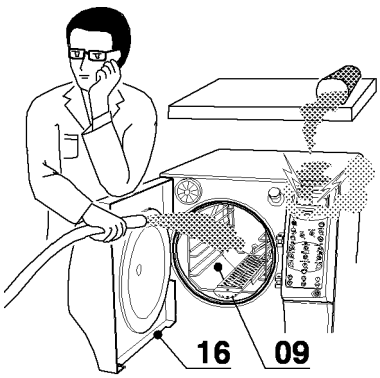

Information in the present operating instructions do not replace any safety instructions or technical data to be followed during installation and operation on the unit itself, nor any safety standards in force in the installation country as well as any other common sense rule.

The unit is to be cleaned using suitable means and detergents which are not affecting the unit parts. It is absolutely forbidden to clean or wash the unit with water jets.
Never lean liquid containers onto the unit upper portion or in the above shelves. A possible leakage or spillage inside the electric installation can lead to a short circuit.
Never lean onto the *door* ***16***.

Thermal danger

Interior parts of the *door* ***16*** and of the *chamber* ***09*** can reach extremely high temperatures. Never touch the heated surfaces if not already cooled and always wear the supplied protection gloves.
The same applies when a load is to be removed from the sterilisation chamber.
To remove *trays* ***04*** holding the load, always use the *tray handle* ***01***.
Never leave the tray handle inside the sterilisation chamber.

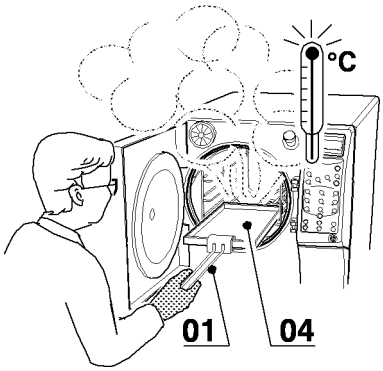

When opening the door ***16,*** *steam could easily escape, thus leading to possible burns.* ***Never stop in front or above the door!***

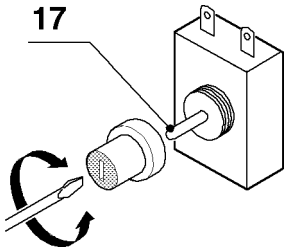

Within the sterilisation chamber, temperature is controlled through a thermostat which switches on in case of overheating.
The *safety thermostat* ***17*** is to be manually reset.

Noise

The sound pressure level (noise) detected within suitable area on the workplace is to be lower than 70dB (A).

Environmental conditions and risks

The unit can not be installed outside or under unfavourable weather conditions (sun, rain, snow, wind).

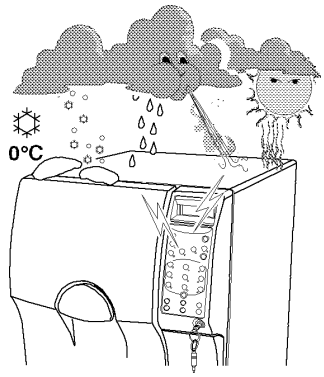

What is more check that there is no electro-magnetic interference which could affect data on any electronic equipment.

The unit is not serially fitted to be operated where fire or explosion risks are high.

COMINOX is not liable for any material disposal required for the unit operation and production such as: **plastic packaging or waste water which could be bacterially infected...** and the customer is personally liable, according to any regulation in force in the different countries, for disposing of such substances which are potentially harmful for the environment.
The same applies in the case of the unit scrapping.

The unit was designed in compliance with good practice and standards relating to energy saving, avoiding wastes and useless dispersions.

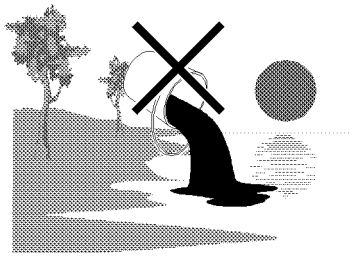

Residual risk table

RISK ANALYSIS AND DESCRIPTION	SUGGESTED REMEDY
Losses, leakages or blow-up leading to further risks such as slipping, short circuit or pollution.	Accurately clean the workplace
Waste water drain which is infected by virus, bacteria, pathogenic micro-organisms.	Dispose according to the regulations in force
Water and/or gas steam fumes when opening the *door* ***16***.	Always carefully check whether the load complies with cycle temperatures and pay due attention when opening the door.
Surfaces excessively hot mainly in the sterilisation *chamber* ***09*** and at the solenoid valve or interior part level.	Wear protection gloves and/or never touch any interior part if not duly AUTHORISED.
Chamber tightness when the unit is off, no animal or vegetal micro-organisms can survive inside the chamber.	Never allow vegetal or animal micro-organisms to enter the chamber
Poor cleaning or nameplates and/or instrument abrasion can lead to mistakes and consequent dangers	Accurately clean, with suitable products, instruments and nameplates.
Poor personnel training.	Ask for an additional training course to **COMINOX.**

GENERAL CONDITIONS

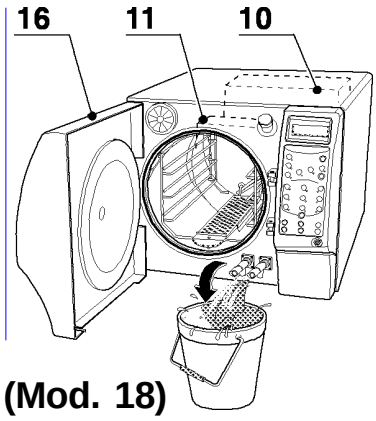

(Mod. 18)

The unit is generally protected by a packaging, consisting of a small pallet and a cardboard box.

Lifting and transportation are to be carried out by qualified personnel only.

Weights@and sizes are specified in the chapter TECHNICAL SPECIFICATIONS.

Lifting means should not damage or affect the unit operation.
The packed unit is to be lifted after being fitted onto the special pallet and by means of forklifts only.

(Mod. 24)

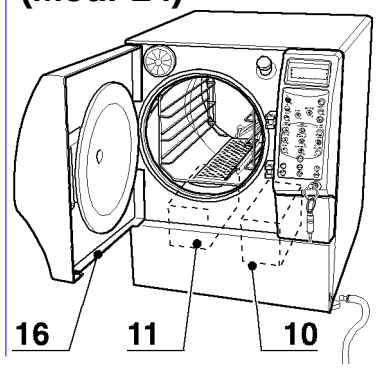

The unit transportation, mainly on road, is to be carried out profiting from suitable transportation means and paying due attention to protect the different parts (mainly electronic) from bumps, crashes, moist, vibrations and so on.

*Any transportation is to be carried out after completely emptying the clean water tank **10** as well as the waste water recovery tank **11**.*

COMINOX refuses any unit to be repaired with full tanks.
Refer back to the OPERATION chapter – *manual tank drain*.

Heavy part and equipment handling and/or lifting (more than 30 Kg) is to be carried out only with suitable lifts.

In the case of manual lifting, at least two people are required, using the special supplied *lifting belts **23*** and following the correct procedure as specified in the regulations in force.

*Never lift or handle the unit through the door **16** or any plastic part as supporting top.*

Unpacking and unit cleaning

Remember that packaging (wood, nails, paper, plastics, metal staples, adhesive tape, straps, ropes) can cut and/or injure, if not carefully handled.

They are to be removed by special means and not left within reach (especially children). The same applies to any device used to remove packaging (scissors, hammers, tongs, knives, etc...).
Any packaging part is to be removed and disposed according to the regulations in force in each single country.

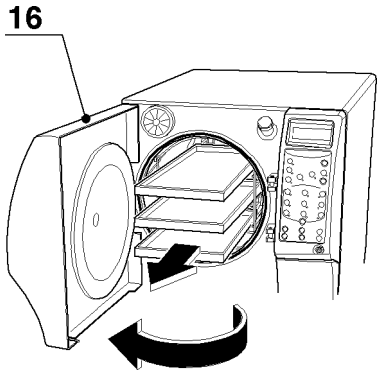

It is advisable to keep both the packaging and the *lifting belts 23* within reach for any possible future unit handling.

First of all, once opened the packaging, thoroughly check pieces and parts the unit consists of. Check that any demanded part is present as well as its general conditions (refer back to SUPPLY CONDITIONS).

Remove any supplied part opening the door **16** (refer back to OPERATION).

*In case of defects or deteriorations, immediately interrupt any operation and immediately get in touch with the shipping or forwarding agent and promptly inform **COMINOX.***

The load supporting system and the autoclave external surface are sometimes protected by a plastic layer: remove it before any operation.

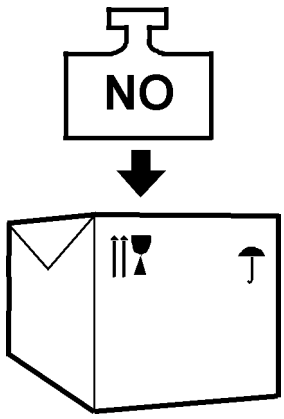

Storage

Should the unit not immediately used or removed from the installation site, it is to be stored in a dry place and duly protected.

When the unit is to be covered with plastic layers, fit in silica get or any dehydrating system inside the packaging.

Never lean anything on the unit packaging, and more precisely loads with protruding feet or screws.

Ideal environmental conditions for storage are:
- **temperature with empty installations - 25°C + 40°C**;
- **maximum relative humidity 90%**.

GENERAL CONDITIONS

The unit installation is to be carried out according to the Customer requirements and on the site the unit is to be fitted in. It is therefore important that the Customer promptly inform **COMINOX** on possible special conditions (environmental conditions, size or built-in limits, etc.)

The operation is to be carried out by trained and qualified personnel only: it is important to comply with what specified in the present operating instructions and with technical diagrams and documents.

In general, it is necessary:
- to check that any environmental condition is correct (explosion risk, excessively aerated areas, high humidity);
- to check that the unit is not exposed to any adverse weather conditions, such as sun, rain, wind, etc...;
- to check that power supply complies with what specified on any nameplate on the unit;
- to check that the *power supply* is correctly grounded

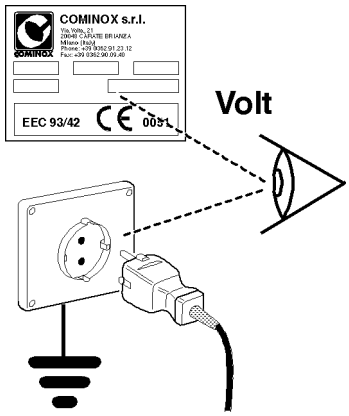

Avoid any electro-magnetic interference which could affect the electronic equipment correct operation, leading to consequent dangers.

Setting

The unit is to be installed inside:
a laboratory, medical cabinet, dental cabinet or similar, accessed only by **trained and authorised personnel**.

IT IS NOT BE INSTALLED:
- next to heat sources;
- in rooms where volatile explosive substances are kept;
- under or above any live equipment;
- within unsuitable built-in units;
- without the fitted adjustable feet;
- in unsuitable places, easily accessed by unqualified or untrained personnel;
- on soft, unstable or wheeled surfaces.

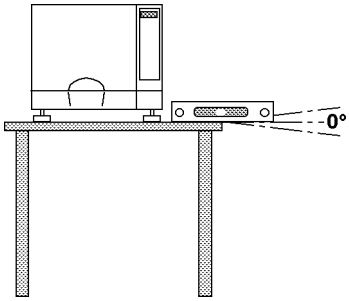

Position the unit rightly where it has to be installed, on a stiff surface, perfectly horizontal.

When installing the unit for the first time, or should it be removed from its original installation site, follow and repeat the hereby described procedure:
- position and direct the unit where it is to be commissioned and do not move it afterwards;
- open the *door* ***16*** and the remove the *chamber* ***09*** content;

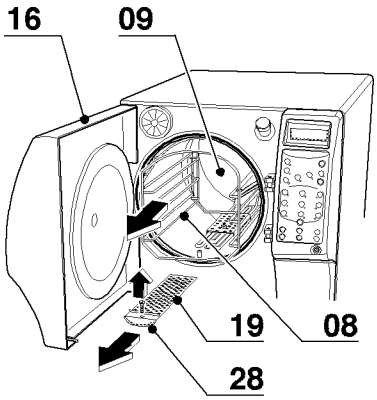

ATTENTION: the door 16 can not be opened if the unit is on (refer back to OPERATION)

- remove the coil *covering grid* ***19*** loosening any relating screw;

- remove the *tray support* ***08***;

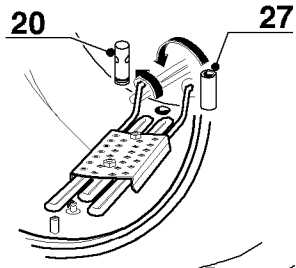

- remove the *waste filter* ***20*** and put the supplied *level testing pipe* ***27*** in the hole; the filter is not fitted in the middle portion of the chamber.

- use the *metering funnel* ***05***, close it with the supplied plug and fill it with what follows according to the unit model:

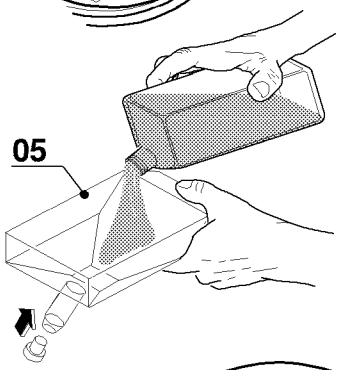

Mod. Sterilclave®18 = 60 cc.
Mod. Sterilclave®24 = 80 cc.

- ONLY USE DISTILLED or demineralised WATER (refer back to the Feeding water table)

- slowly pour the funnel content into the chamber;

- the poured water could not drain from the discharge and drain hole and therefore will flow outside the chamber. Water should not leave the chamber. If the levelling is correct, measured water, correctly poured in, must touch the *chamber probe* ***21***;

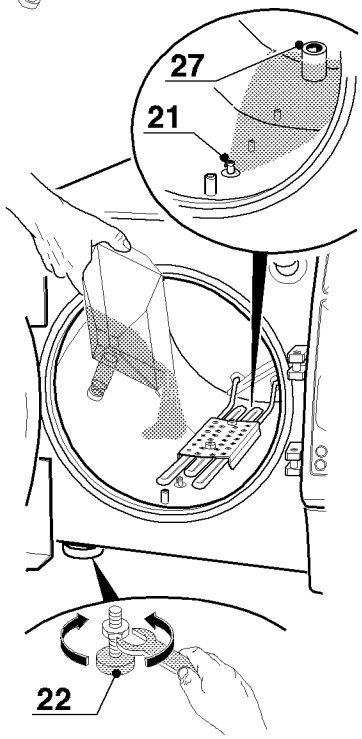

- should a similar condition not arrive, adjust the *adjustable feet* ***22*** after loosening the clamping nuts.

- adjust raising the feet if water tends to outflow or lowering them vice versa.

- after levelling, tighten the *adjustable feet* ***22*** clamping nuts, empty water and dry the chamber with a cloth.

ATTENTION: NEVER ENTIRELY REMOVE THE FEET
Never fill the space under the unit;
Remove the level testing pipe ***27*** *and fit in the waste filter* ***20****;*

- fit the *tray support* ***08*** and at the same time the *coil covering grid* ***19*** to be tighten thanks to the opposite screw. Pay attention to the *grid seal* ***28***.

CONNECTIONS

Electrical connections

When connecting the unit to the power supply, the power *supply cable* ***03*** is fitted into a suitable socket (refer back to the GENERAL CONDITIONS and *technical feature Table*).

Water connection

An option available on BHD models and to be fitted on demand (OPTIONAL) to all the other units.
When such an option is fitted, it is possible to avoid stopping the unit to fill the *clean water tank* ***10*** and to empty the *waste water recovery tank* ***11***.

1) Water self charge

It is an alternative configuration to *clean water tank* ***10*** manual charge (refer back to CLEAN WATER TANK MANUAL CHARGE).
A) FROM AN EXTERNAL TANK (maximum height different from 1 meter): the water self charge **29** pipe can be directly fitted to a demineralised or distilled water tank easily found on the market or a tank of distilled water produced, for example, by means of the COMINOX DISCOM accessory for the tap water distillation.

B) FROM WATER MAIN: It can be connected to the mains water demineralisation system COMINOX SPEEDY WATER.
In the case of both configurations **A** and **B,** it is necessary to set:
Self charge = 1 (through the control panel);
The **B** configuration is only to be fitted in by an authorised and qualified technician.
Check that the water quality complies with water supply table.

2) Direct drain

An alternative configuration to the *waste water recovery tank* ***11*** manual drain (refer back to TANK MANUAL DRAIN).
Connect the tube fitted with a male rapid connection to the female connection of the *direct waste drain* ***30*** after fitting the other end of the tube to a suitable drain.
Once the pipe connected, water present in the *waste water recovery tank* ***11*** will start to outflow.

ATTENTION: Liquid temperature can reach 80 °C and liquid can be infected. Such liquid is to be disposed according to the regulation in force in each single country.

(Mod. 18)

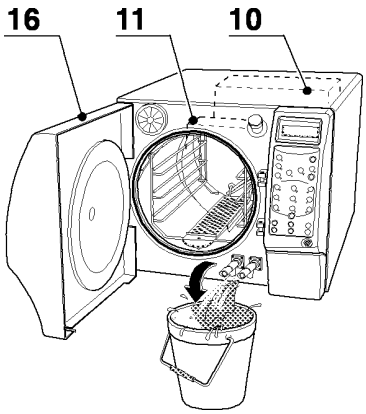

(Mod. 24)

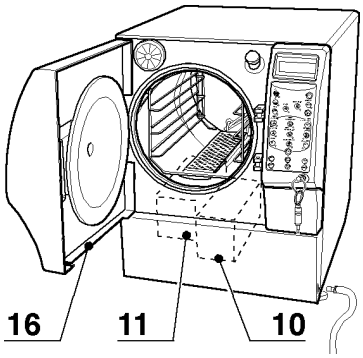

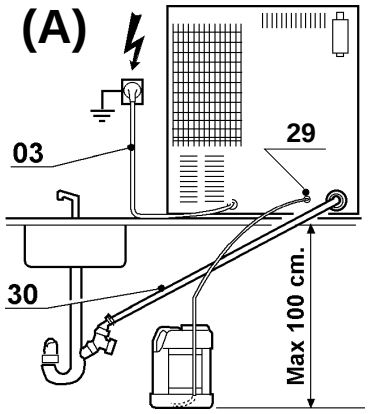

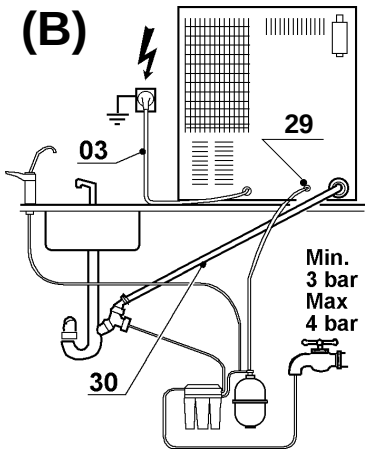

Water supply table

	water supply
Evaporation residues	≤ 10 mg/l
Silicon dioxide SiO_2	≤ 1 mg/l
Iron	≤ 0,2 mg/l
Cadmium	≤ 0,005 mg/l
Lead	≤ 0,05 mg/l
Remaining heavy metals with the exception of iron, cadmium, lead	≤ 0,1mg/l
Chlorides	≤ 2 mg/l
Phosphates	≤ 0,5 mg/l
Conductivity (at 20°C)	≤ 15 µS/cm
Acidity value pH	from 5 to 7
Appearance	colourless, clean, with no sediments
Hardness	≤ 0,02 mmol/l

CLEAN WATER TANK MANUAL CHARGE

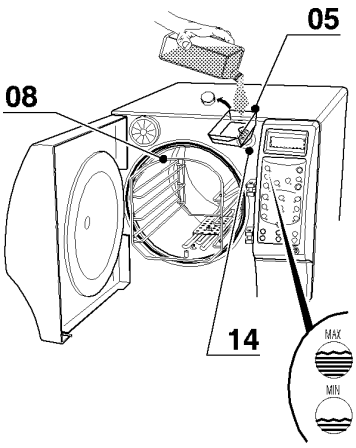

When not present or programmed, the WATER SELF CHARGE (refer back to WATER SUPPLY) or in any case the first charge of the *clean water tank* ***10*** is manual only. Loosen and remove the plug from the *filler* ***14***, fit in the supplied *metering funnel* ***05*** and pour in suitable distilled or demineralised water (refer back to the *Water supply table and technical feature table* as far as quantity is concerned).

If charge is carried out when the unit is off or in STAND-BY, MIN and MAX LEDS on the control panel allow to check the water level; a sound signal lasting for 2 seconds is heard followed by the MAX LED switching on: it means that the tank is full.

Top up any time the MIN LED is on, before starting any cycle.
As to provide for the best operating range, in any case fill in the tank until the MAX LED switches on and completely empty the *waste water recovery tank* ***11*** (refer back to the TANK MANUAL DRAIN).

TANK MANUAL DRAIN

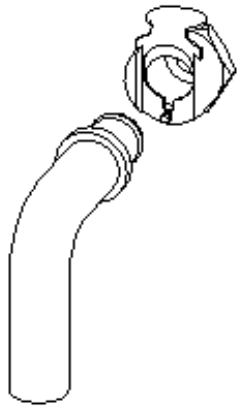

When the DIRECT DRAIN (refer back to the WATER SUPPLY) is not present or it is not connected, it is necessary to connect the *waste water recovery tank* ***11*** manual drain any time when, starting a cycle, the message “MAX WASTER WATER LEVEL” is displayed on the display (refer back to ALARM SIGNALLING).
Connect the supplied waste pipe **02** to the *waste water tap* ***25*** after placing a sufficiently big container under the other end (refer back to the Technical feature table) to recover water.

Once the water tap is opened, possibly present water in the *waste water recovery tank* ***11*** will start to outflow.

ATTENTION: liquid temperature can reach 80 °C and liquid can be infected. Liquid should be disposed of according to the legislation in force.

As to be self-sufficient and provide for an automatic operating range, it is necessary to completely empty the tank and completely fill the *clean water tank* ***10*** until the MAX LED switches on (refer back to CLEAN WATER TANK MANUAL LOADING).
The *clean water tap* ***24*** is used to empty the clean water tank in case of maintenance or transportation (refer back to chapters TRANSPORTATION and MAINTENANCE) and it is only used under such conditions.

BUILT-IN SETTING

Should the unit be fitted to a built-in unit or with a different rack, it is necessary to comply with ANY previously specified instructions in the case of the normal installation, what is more:

- comply with any built-in distances (refer back to general sizes):
- comply with the correct unit aeration;
- take the unit *heat emissions* into account (refer back to the technical feature table)
- provide for the *door* ***16*** opening;
- provide for any routine maintenance;
- never damage the unit;
- provide for any demanded room to fit in any water supply connection fitting.

CONTROL PANEL

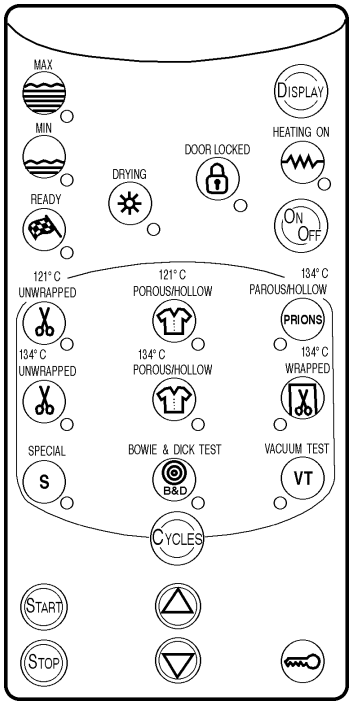

Maximum *clean water tank* ***10*** LED	**MAX**	
Minimum *clean water tank* ***10*** LED	**MIN**	
COMPLETE CYCLE LED; it switches on at the CYCLE COMPLETE together with the message on the display.	**READY**	
Unit drying LED; the led blinks during the drying process.	**DRYING**	
Locked door LED; the led can be switched on when the unit is ON or OFF. In both cased the *door* ***16*** is closed and locked.	**DOOR LOCKED**	
Heating unit LED; when the led is on, one of the heating coils is on.	**HEATING ON**	
KEY for the display back-lighting OFF; the same key in the STAND-BY condition allows to visually display data referring to: temperature, relative pressure, number of completed cycles, date and hour. When the key is kept pressed for 5 seconds, it is possible to set in a series of parameters, such as language, hour and date, self charge, printer operation, self stop.	**DISPLAY**	

Unit STAND-BY KEY: it is off during any cycle.	**ON/OFF**
Cycle shift KEY. When pressing the key, it is possible to choose the demanded cycle (**refer back to the cycle/sterilised material table)**	**CYCLES**
121 °C cycle LED, for delicate solid products, UNPACKED only	**121°C UNWRAPPED**
121 °C cycle LED, for porous and hollow delicate products, packed and unpacked	**121°C POROUS/HOLLOW**
134 °C cycle LED for porous and hollow solid products which enter in contact with infective BSE agents, PACKED or UNPACKED	**134°C PRIONS POROUS/HOLLOW**
134 °C cycle LED, for SOLID products only, UNPACKED	**134°C UNWRAPPED**
134 °C cycle LED, for porous or hollow solid products, packed or unpacked	**134°C POROUS/HOLLOW**
134 °C cycle LED, for solid products, packed and unpacked	**134°C WRAPPED**
SPECIAL LED cycle, to be programmed by the user by means of the special access key	**SPECIAL**
Bowie & Dick TEST cycle LED	**BOWIE & DICK TEST**
VACUUM TEST cycle LED	**VACUUM TEST**
KEYS to switch on and off the cycle. The START cycle is sometimes used as an ENTER key. The STOP key is also used as an emergency stop key.	**START STOP**
KEYS to increase or reduce a data to be programmed on the display or to scroll up and down the menu. The key is used to stop a displayed message on the display, during sterilising or drying, on the specific time at the end or on temperature and pressure: The key is used to move paper onward, in STAND-BY, on the *printer* ***26*** (OPTIONAL), if enabled.	
JACK plug for the *access keys* ***06.***	

Supplied keys are used to enforce the programme selection on each single unit:

- **WHITE KEY:** it allows to select any cycle and access the SPECIAL cycle data selection and programming. What is more, if a *printer* ***26*** is fitted (OPTIONAL), such a key allows to print data any time and minutes, and not only at any cycle phase change
- **BLACK KEY:** it is used to select any cycle, with the exception of SPECIAL cycle
- **Both keys** can be used to stop any ALARM during the cycle. The alarm is stopped pressing the key STOP.

GENERAL CONDITIONS

It would be extremely important to extensively know the available INSTRUMENTS; to avoid damages to the unit and to the operator. Therefore it is suggested to carefully read instructions in the operating instructions and in case of doubts or non compliance among the different instructions, ask for more detailed information.

Refrain from operating the unit if:
- *not qualified enough to operate the unit or similar units;*
- *it is impossible to understand how the unit works;*
- *it is difficult to understand specific consequences of any cycle choice;*
- *there are possible operation failures;*
- *there are doubts or contradiction, misunderstanding and misinterpretations between self experience, the operating instructions and/or different operators.*

Carry out any operation described before such a chapter and then move to the START-UP

START-UP

When the unit is to be started up:
- press the *cut-out switch* ***13***; and the following message is displayed on the display:.

OFF
xx/yy/zz hh:mm

Stand-by

STAND BY
.....°C .....bar

When pressing the ON/OFF key, the following message is displayed:.....
alternating every 2 seconds with the message relating to the selected cycle name.
On the control panel, the led relating to such cycle is switched of.
If the door was previously closed and blocked, now, if the DOOR LOCKED is off, the door itself can be opened.

When the unit is in STAND BY and when the door **16** is closed using the handle, pre-heating starts. Remove any heavy object which do not belong to any cycle from the chamber (refer back to the unit unpacking).

Pre-heating is disabled when VACUUM TEST is selected.

*From now on it is NOT possible to touch any door **16** internal parts, any chamber **09** parts, accessories or loads to be sterilised, if not wearing the special protection gloves or using the special supplied instruments.*
*During pre-heating, temperature in the chamber **09** can reach 50/60 °C and wall temperature 120/130 °C.*

Pre-heating will stop any time the *door **16*** is opened. Under such conditions, the sterilisation *chamber **09*** will start slightly cooling to room temperature. The chamber pre-heating is not compulsory for the first sterilisation cycle with a cold unit. No time therefore is programmed for the unit setting. However after pre-heating the unit simply closing the door by means of the handle, when the “HEATING ON” LED switches on, on the control panel, the cycle total required time is cut to the bare minimum, thus improving the load drying and avoiding heat dispersions between different cycles.

From the STAND-BY conditions, it is possible to press the key DISPLAY thus consecutively displaying:
- temperature;
- relative pressure;
- TOTAL CYCLE N. (aborted cycles included);
- date and hour.

Temperature
.....°C

PRESSURE
REL bar

TOTAL CYCLE N.

DATE TIME
xx/yy/zz hh:mm

From such a condition, it is possible to move to sterilisation (refer back to the *sterilisation cycle start-up*).

Settings

Keep the key DISPLAY pressed for 5 seconds, the following message will be displayed: .....
as far as the programmed language is concerned.
Press the key △ or ▽ when the language is to be modified.

LANGUAGE
ENGLISH

Press the key START to confirm the choice and the following message will be automatically displayed:.....

SETTING
xx/yy/zz hh:mm

Press the key △ or ▽ to increase or reduce the blinking value.
Press the key START to confirm the chosen value and automatically a different value starts blinking.

Continue and confirm all the different values until, once confirmed the minute value, the following message will be displayed:....

SELF CHARGE
0

Press the key START to confirm the water self charge exclusion (OPTIONAL, in the case of B and S models), if available or if manual load is required or press the key △ to change the information in:...
and finally confirm pressing the key START to set the water self charge (refer back to chapter CONNECTIONS).

SELF CHARGE
1

Once the information confirmed, the following message will be automatically displayed:....

PRINTER 1 = ON
0

If an integrated *printer **26*** is available, press the key to change the information in:...
And confirm pressing the key START to start the cycle information printing for any available cycle (refer back to the PRINTER chapter).

PRINTER 1 = ON
1

If the *printer **26*** is not present or if the printer is to be enabled, leave the information:.....
as it is and confirm pressing the key START

PRINTER 1 = ON
0

Once confirmed the information, the following message will be automatically displayed:....
If the unit auto shutoff is to be set, press the key to move the information to 1 and confirm pressing the key START; otherwise confirm 0
(refer back to the chapter AUTO SHUTOFF).

AUTO SHUTOFF
0

Once confirmed the information pressing the key START, it will be possible to exit the setting menu back and return to the previous message:....

STAND BY
.....°C .....bar

Preparation of the load to be sterilised

As already specified in the chapter OPERATION, instruments or fabrics to be sterilised are to be perfectly washed, rinsed with water with no additives and dried. In case of manual instrument cleaning, to avoid any infection risk, it is suggested to wear suitable protection gloves. It is suggested to automatically wash the instruments in an "OMNIWASH" instrument washing unit or with an ultrasound "SONICLEAN" unit. At the end of washing cycle, rinse the instruments with a spongy cotton cloth to perfectly remove any rinsing water residue. Uniformly position the material to be sterilised in the supply *trays **04*** complying with instruction in the chapter OPERATION, pay attention that the total maximum weight specified in the *Sterilised material cycle table* includes the loading and charge support and the packaging material.

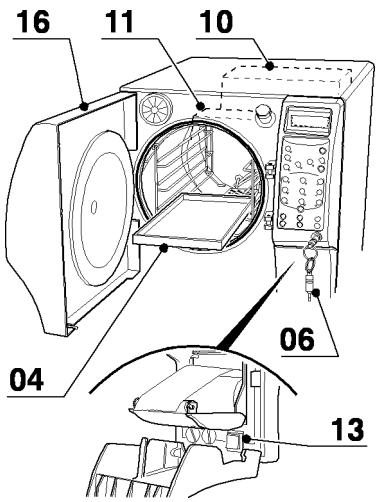

Only use the load supporting system supplied by COMINOX and never remove the *tray support **08***. Never mix solid or hollow instruments with porous loads in the same load during the same sterilisation cycle (for example metal instruments and fabrics).

If the material is to be packed for a sterile storage, for example paper/polythene envelopes, comply with what specified in standard EN868 and seal envelopes with a 8 mm wide sealing. In this connection it is recommended to use a COMINOX sealer with built-in cutting and roll support, which carries out a 10 mm-wide sealing for a max. length of 250 mm. Envelopes are preferably to be fit in vertically, to improve drying, by means of the *envelope holder **07*** (optional), or flat on the *trays **04***, the paper side downward and not piled up one on the other. Alternatively it is possible to pack and seal the tray **04** directly inclusive of its content (paper side downward).

The load and any part of its content or its packaging are never to touch the *chamber **09*** walls or the *door **16***.
Possible sterilising chemical indicators are to be fitted in the load on the *trays **04***, or inside any packaging.

Selection of the sterilisation cycle

As to select one of the sterilisation cycles available and described in chapter OPERATION, it is enough to use one of the two *access keys **06***.
To select the SPECIAL cycle or to re-program such a cycle (refer back to the chapter OPERATION), it is necessary to use the WHITE key.
Fit the access key referring to the selected cycle into the JACK plug, press the key CYCLES to select it.

SPECIAL cycle programming

After carefully reading any information relating to the SPECIAL CYCLE in the chapter OPERATION and fitting the WHITE access key into the JACK plug, press the key CYCLES as many time as required until the SPECIAL CYCLE LED switches on.
Once the LED is on, press the keys △ and ▽ and keep them pressed for 5 seconds until the following message appears on the display: ……

LIQUIDS 1 = SI 0

Press the key START to confirm excluding the sterilisation LIQUID setting (refer back to the chapter OPERATION) or press the key △ to change the information in: ……
And confirm simply pressing the START key.

LIQUIDS 1 = SI 1

Once the information confirmed, the following message will be automatically displayed: …….
press the key △ or ▽ if the sterilising temperature is to be modified.

TEMPERATURE °C
.....

Press the key START to confirm the selection; the following message will be automatically displayed: ……
press the key △ or ▽ if the sterilising time is to be modified.

TIME min
.....

Press the key START to confirm the selection. Automatically it will be possible to leave the previously chosen programming, if LIQUIDS sterilisation setting was selected. But if, such a setting was excluded, the following message will be automatically displayed:……
Press the key △ or ▽ if the vacuum pulse number is to be modified.

N. VACUUM PULSES
.....

Press the key START to confirm the selection; the following message will be automatically displayed: ….
Press the key △ or ▽ if the drying lasting time is to be modified (or to cut it off setting the value “0”).

DRYING min
.....

Press the key START to confirm the selection; Automatically it will be possible to leave the previously chosen programming, and it will be possible to move back to the message: ….
Such a programmed SPECIAL cycle will be saved and used with the same information until it is newly programmed.

STAND BY
....°C ....bar

FIRST CYCLE Start-up

In stand-by, the following message is displayed on the display: ……
alternating every 2 seconds with the message relating to the selected cycle name.
- Check that:
• The selected cycle is the required cycle;
• The load was correctly fit in;
• The MIN LED on the control panel is off
• The door **16** is perfectly closed
• The printer, if present and correctly set (refer back to OPERATION / Settings), holds paper and its door and the external inspection door **18** are well closed.

STAND BY
.....°C .....bar

- Press the key START; and on the display the following messages will be sequentially displayed: ….
relating to the selected cycle.
The DOOR LOCKED LED will be switched on signalling until the end of the cycle that the safety door locked block is set;
The LED HEATING ON LED will be switched on during heating.

CYCLE
.....°C .....min

WITH (WITHOUT) DRYING

- The pre-vacuum phase is started during which air is removed from the chamber until reaching the programmed vacuum pressure;

PRE VACUUM
.....°C .....bar

- Then the vacuum pulse phase follows, during which one or more steam peaks will follow one another followed by the same number of vacuum pulse peaks according to the demanded steam penetration for the specific load to be sterilised during the selected cycle;

STEAM PULSE
.....°C .....bar

VACUUM PULSE
.....°C .....bar

- Then the pressurisation phase follows, during which pressure and temperature values are increased until they reach the required sterilisation temperature;

PRESSURIZATION
.....°C .....bar

- Finally sterilisation starts
the relating message is displayed……
alternating every 2 seconds with the message relating to the required time until the end of sterilisation;

STERILIZATION
.....°C .....bar

During such a phase, it is possible, when pressing the key △, to stop displaying information relating to temperature and pressure or to time required to come to the end of sterilisation. When finally pressing the key △ once more, it is possible to start alternating displaying the different information.

TIME TO THE END
.....m .....s

*ATTENTION: during the described procedures and the following phases and steps, until the end of the cycle, the message relating to the cycle phase followed by temperature and chamber **09** pressure is displayed.*
The specified value relating to pressure, throughout any phase, is an ABSOLUTE value (room pressure + relative pressure). The RELATIVE pressure value is displayed pressing the key DISPLAY (refer back to STAND BY). The ON/OFF key when the cycle is on is disabled.

- At the end of sterilisation drain follows, where steam outflows from the chamber **09** depending on the pressure difference. If the cycle is set to a drying time = 0, when pressure reaches a value lower than 0.2 relative bar, the following message will be displayed CYCLE COMPLETE....

DRAIN
.....°C .....bar

CYCLE COMPLETE
.....°C .....bar

If the selected cycle is a SPECIAL cycle, programmed for LIQUIDS, at the end of sterilisation, the following message will be displayed:....
(refer back to SPECIAL CYCLE)

DE-COMPRESSION
.....°C .....bar

NEVER stop a liquid cycle before the following information is displayed on the display "CYCLE COMPLETE".

Pressure will start dropping to the natural cooling until a value lower than 0 relative bar is reached and then on the display the message "CYCLE COMPLETE" will be displayed:...

CYCLE COMPLETE
.....°C .....bar

- If drying is set, after draining, vacuum drying starts. The DRYING led starts blinking and the following two messages are displayed on the display alternatively every two seconds:...
In such a phase too, it is possible to stop displaying any information (refer back to the sterilisation phase).
The vacuum pump keeps on working throughout all the scheduled time. Under such conditions sterile air is let in through the *air sterilising filter **15***. At the end of drying, the vacuum pump stops, pressure moves back to 0 bar and the led READY switches on. On the display the following message is displayed.....

DRYING
.....°C .....bar

TIME TO THE END
.....m .....s

CYCLE COMPLETE
.....°C .....bar

Sterilising cycle stop

ATTENTION: The cycle can be stopped at any time, pressing the key STOP, but it is advisable to stop the cycle only in case of emergency.

Should a cycle be stopped with a packed instrument load in, even when sterilisation is concluded, sterility is not guaranteed as the load is not dry. If not immediately re-used, instruments are to be sterilised once more.

- Press the key STOP; READY and DOOR LOCKED LEDS switch off and it is possible to move back to the STAND BY mode;

*In the case pressure inside the chamber **09** is higher than 0.2 bar, the door locked device is still on and the DOOR LOCKED led is still on, it is not possible to open the door.*

- Wait for pressure to be reduced to 0 bar checking relating pressure through the DISPLAY key and open the *door **16***.

PAY ATTENTION to steam coming out from the door and never touch the load or its supporting system or any hot surface if not wearing suitable protection gloves or if not using the special tray handle.

- Remove the load and check, in the case of a packed load, if packaging was not damaged (for example open sealing). The material inside damaged packages is to be repacked and sterilised once more.
- If present and set (refer back to the chapter SETTING), the *printer **26*** (OPTIONAL) prints a complete report on the entire cycle: press the key as to scroll up paper until it is possible to cut it on the cutting edge at the inspection *printing door **18*** level.
- In case the STOP key is pressed within 10 seconds from the READY LED switching on, the vacuum pump starts operating to avoid building-up condensation. Such a procedure can be stopped at any time, simply pressing the key STOP.

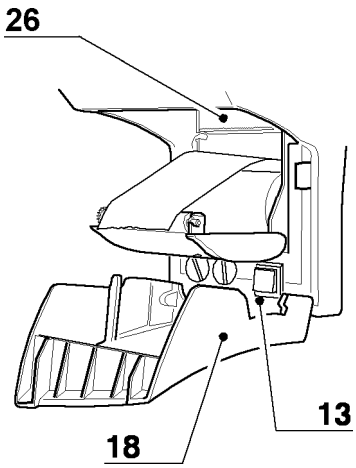

SUBSEQUENT sterilising cycle start-up.

The procedure and specific rules to be followed in the case of the following cycles are similar to the cycle first START-UP but if a cycle is to be started within a short distance from the previous cycle and temperature is still higher than 90° C (80 °C in the case of the Model 18B), after pressing the key START, the following message will be displayed on the display: .....

COOLING
PAUSE

It is possible to:

a) Wait for the unit to automatically lower temperature before starting the cycle

b) Press the key STOP to stop the cycle.
Open the *door **16*** to aerate the chamber, removing the load for a few minutes, thus speeding the entire cooling procedure up. Rinse the load, close the door and start the cycle pressing the key START.

If temperature in the chamber is higher than 80 °C (60 °C for the Model 18B) before pressing the key START, in STAND BY the following message will be displayed:.....
And the autoclave will stop any possible cycle setting.

COOLING
PAUSE

Keep the *door **16*** opened to aerate the *chamber **09*** and simply start the cycle when the message “COOLING PAUSE” is no longer displayed on the display (t < 80 °+C).

Printer (OPTIONAL)

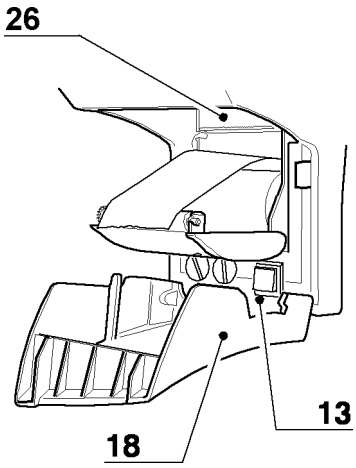

If present and set (refer back to SETTING) the *printer* ***26*** fitted to the control panel, during the started cycle, prints any information relating to the selected cycle and to the following phase throughout the cycle, until its end.

With the access key fitted in, the *printer* ***26*** prints data relating to pressure, temperature and time at any phase change. If the white access key is used, the printer prints at any minute of elapsed time. To fit in or replace a *printer* ***26*** paper roller, it is enough to open the *printing door* ***18*** and then the printer internal door. They are both tilted downward. Fit it or replace the paper roller with a compatible roller (thermal paper) and fit it with a paper portion coming out from the upper slide.

Close the printer door and *door* ***18*** on the control panel and press the key ▽ to move paper into the door slide.

SELF AUTOMATIC SHUTOFF

The autoclave is fitted with a self automatic shutoff system. Under STAND-BY conditions, no operator can use the unit for more than 30 minutes, otherwise it automatically shuts off.
If no operator presses the key STOP after a concluded cycle for more than 30 minutes, the autoclave automatically shifts to the POWER SAVING mode. The cycle complete procedure and any displayed information is saved while the READY LED remains on. Display back-lighting and any power is stopped.

The two described operations can be set by means of the self automatic shutoff setting (refer back to SETTING) on the control panel.

CONTROL TEST

BOWIE & DICK Test

The BOWIE & DICK test is used to check the correct steam penetration into porous loads (for example gauzes and fabrics) and the air drain system efficiency.
The test mainly consists of packaging holding a process chemical indicator.

The Bowie & Dick test is to be carried out only when the unit is HOT, that is at the end of a previous cycle.

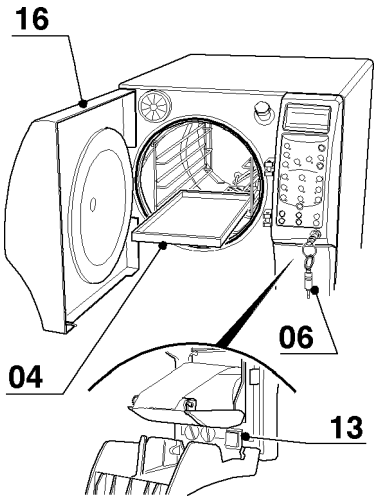

To correctly carry out the test, it is necessary to follow the same procedure enforced in the case of any other sterilising cycle, without loading the unit and follow the hereby specified instructions:
- Switch the unit on by means of the *cut-out switch* ***13*** and follow the same procedure described in the case of the START-UP;
- Open the *door* ***16***;
- Fit in a “BOWIE & DICK” test packaging to the first *trays* ***04***, the lower tray;
- Close the door;
- Fit in the supplied *access key* ***06*** in the specific socket;
- Press the key CYCLES as many time as required to switch the BOWIE & DICK TEST LED on;
- Press the key START and wait for the test conclusion as specified on the display with the information CYCLE COMPLETE

- Press the key STOP and wait for the unit pressure to move back to 0 bar, then open the *door* ***16***;
- Remove the tray holding the TEST and check the result following the manufacturer's information.

VACUUM Test

The VACUUM TEST is used to check the efficacy of the vacuum pump and the correct and perfect tightness and operation of the hydraulic circuit.

The VACUUM TEST is to be carried out when the unit is COLD (room temperature).

As to correctly carry out the test, it is necessary to follow the same procedure as a normal sterilising cycle, without charging and loading the unit as follows:

- Switch the unit on by means of the *cut-out switch* ***13*** and follow the same procedure described in the case of START-UP;
- Close the *door* ***16***;
- Fit in one of the supplied *access keys* ***06*** in the special socket;
- Press the key CYCLES as many time as required to allow the VACUUM TEST LED to be switched on;
- Press the key START and wait for the TEST conclusion when the following message is displayed on the display VACUUM TEST COMPLIANT
- Press the key STOP, wait for pressure to move back to 0 bar and then open the door.

Should the message "REPEAT TEST" be displayed, the test will be automatically interrupted.
Before repeating the test, open the *door* ***16***, let the *chamber* ***09*** completely cool and check that it is perfectly dry.
Should the VACUUM test be started when the chamber temperature is still higher than 40 °C, the message "COOLING PAUSE" is displayed and no cycle can be started.

ATTENTION: this is the very reason why when selecting VACUUM TEST, preheating with closed door by means of the handle is disabled (refer back to STAND BY).

To be able to press the key START or to start the TEST wait for the *chamber* ***09*** cooling under 40 °C.

When at the end of the VACUUM TEST, the message "VACUUM TEST NON COMPLIANT" be displayed on the display, address to the authorised TECHNICAL SERVICE.

SIGNALLING / ALARMS

Signals and signalling are messages which in the majority of cases ask for a simple correction or control operation by the user. Alarms ask for maintenance or inform about the presence of a possible failure.
When enabled, they are displayed on the display, followed by a sound running for 30 seconds. To reset the signalling or the alarm, it is necessary to use one of the *access keys* ***06*** and then press the key STOP.
The "COOLING PAUSE" and "CHECK WATER QUALITY" signals are followed by a sound and do not need any reset through the key STOP.

Signalling

It signals that the *chamber* ***09*** temperature is not suitable to start the unit up or to keep the cycle running (refer back to chapters START-UP, FOLLOWING STERILISATION CYCLES and VACUUM TEST).	COOLING PAUSE
The STAND-BY is enabled when the *water self charge* ***29*** is programmed in the B configuration from the water supply (refer back to chapter CONNECTIONS). It signals that the water conductivity value, inlet through the demineralisation external system, overcame the optimum level but it is still acceptable; a cycle can be started but it is advisable to follow instructions in the "INSUFFICIENT WATER QUALITY" alarm (refer back to chapter ALARMS AND TROUBLESHOOTING).	CHECK WATER QUALITY
The STAND-BY is enabled when the *water self charge* ***29*** is programmed (refer back to chapter CONNECTIONS). If the A configuration is set, it is necessary to fill or replace the distilled or demineralised water tank. If B configuration has been installed, check whether the mains water tap is open and the mains pressure ranges between 1 and 4,5 bar.	CHECK SELF CHARGE
It signals that the *waste water recovery tank* ***11*** is full. The signal enables the cycle start-up. Empty the tank (refer back to chapter TANK SELF DRAIN in the chapter INSTALLATION). If the direct waste discharge **30** is programmed (refer to chapter CONNECTIONS), check the correct connection and that the pipe is not bent or clogged.	MAX USED WATER LEVEL
It signals that the *door* ***16*** was not correctly closed. Well close the door before starting a cycle up.	DOOR OPEN OR NOT LOCKED
It signals that during the cycle start-up, the STOP key was pressed before the natural cycle conclusion. Taking into account that the load IS NOT STERILE, re-start a new sterilisation cycle.	ALARM MANUAL STOP
It signals that during a cycle, the unit was cut from the main power supply. On the display, when the unit is connected to the power supply, the message relating to the missing voltage is displayed. Should the unit be cut from the main power supply when the alarms are on, the last alarm will be displayed on the display.	POWER FAILURE .....
A cycle is started up when the *printer* ***26*** (OPTIONAL) is fitted and set. It signals that paper is missing or that the printer door is not perfectly closed. Refer back to the PRINTER chapter and follow the specified instructions.	PRINTER NOT READY
It is activated in STAND-BY mode at the end of a cycle or soon after the autoclave switching on and signalises that the door lock release operation is in progress. Wait until the LED DOOR LOCKED switches off without trying to open the door.	WAIT FOR DOOR LOCK RELEASE

Alarms and troubleshooting

Once the alarm reset pressing the key STOP, and, if possible, the problem which triggered the alarm solved, start a new cycle. Should the problem be still not solved, address a COMINOX AUTHORISED SERVICE CENTRE.
The load in the autoclave during the cycle interrupted by the alarm is to be considered NON STERILE.

Description / ● Remedy	ALARM / TROUBLE
It informs that distilled or demineralised water is missing in the *clean water tank **10***. ● If the alarm is triggered when the cycle is started up, fill the tank (refer back to SELF CHARGE and CLEAN WATER TANK, chapter SETTING) ● if the alarm was displayed during the cycle, fill the tank and move forward according to the instructions given in the case of “INSUFFICIENT STEAM”.	INSUFFICIENT WATER LEVEL
It is enabled in STAND-BY (refer back to CHECK WATER QUALITY, chapter SIGNALLING). It informs that water conductivity value overcame an acceptable value. ● Change the cartridge of the fitting for mains water demineralisation SPEEDY WATER.	INSUFFICIENT WATER QUALITY
It informs that the necessary time was overcome to recover the correct water level within the *chamber **09***. ● Check once more the machine position (refer back to the INSTALLATION chapter).	ALARM CHAMBER LEVEL
It informs that the chamber **09** is overheated with the consequent safety thermostat operation **17**. ● Address a technical service centre.	ALARM TRIAC
It informs that steam or over-heated steam is coming out from the *chamber **09***. ● Check the efficiency and cleaning of the *chamber seal **31*** as well as the *door **16*** internal disk, the seal is fitted to. Possibly, if damaged, replace it (refer back to CLEANING and CONTROLS in the chapter MAINTENANCE). ● Carry out a VACUUM test to check a possible pressure loss. ● Check the machine positioning once more (refer back to INSTALLATION) ● Check that total maximum load weight (refer back to OPERATION) was not overcome.	INSUFFICIENT STEAM
It informs that a small steam loss or unsaturated steam prevented a correct temperature increase within the chamber **09**, during pressurising. ● follow the instructions specified in the case of the alarm “INSUFFICIENT STEAM”. ● If the alarm is still repeatedly on, it could depend on a failure of the heating electric circuit: address a service centre.	ALARM PRESSURIZATION
It informs that temperature inside the chamber **09** overcame 150 °C. ● if the alarm is still on, address a service centre.	ALARM OVER-TEMPERATURE
It informs that, during a vacuum peak, in the vacuum pulse phase, pressure was not reduced to the programmed value. ● follow the instructions specified in the case of the alarm “INSUFFICIENT VACUUM”. ● check that the total maximum load weight (refer back to OPERATION) was not overcome..	ALARM FRACT VACUUM

It informs that during pre-vacuum, pressure did not reach the correct programmed value. ● check the chamber seal **31** efficiency and cleaning as well as the internal *door* ***16*** disk, the seal is fitted to and possibly, if damaged, replace it (refer back to the chapter MAINTENANCE) ● check the *waste filter* ***20*** cleaning and correct positioning (refer back to the chapter MAINTENANCE). ● carry out a VACUUM test to check the presence of possible pressure losses. ● check that ventilation air vents are clear (refer back to BUILT-IN SETTING, INSTALLATION chapter) and ask a technician to check the efficiency of internal fans.	ALARM INSUFFICIENT VACUUM
"STERILISATION TEMPERATURE RANGE: OVER TEMPERATURE". It informs, that during sterilisation, temperature within the *chamber* ***09*** overcame the forecast value by the sterilisation temperature range. ● if the alarm is repeatedly on, address a technical service centre and ask to check the temperature sensor and pressure adjusting.	ALARM STERIL. TEMP. RANGE UNDER
"STERILISATION TEMPERATURE RANGE: UNDER TEMPERATURE". It informs that during sterilisation, temperature within the *chamber* ***09*** is under the minimum forecast value by the sterilisation temperature range. ● check that the total maximum load weight (refer back to OPERATION) was not overcome.	ALARM STERIL. TEMP. RANGE OVER
It informs about a possible problem at the levelling probe level. ● Empty and fill the *clean water tank* ***10*** when the unit is off and idle.	ALARM LEVEL PROBES
NO MESSAGE IS DISPLAYED ON THE DISPLAY ● Check that the plug is live, the correct connection of the *supply cable* ***03*** socket and its connection to the unit. ● Check *fuses* ***32*** and that the *cut-out switch* ***13*** is pressed on the "I" position.	.....
● Check the *chamber seal* ***31*** efficiency and cleaning as well the *door* ***16*** disk where the seal is fitted to, and possibly, if damaged, replace it (refer back to the MAINTENANCE chapter). ● Address a technical service centre to ask for the *door* ***16*** closing adjusting.	STEAM LOSS FROM DOOR
At the end of the cycle, there is still water inside the *chamber* ***09.*** ● check cleaning as well as the correct *waste filter* ***20*** positioning (refer back to the chapter MAINTENANCE) ● control the machine positioning once more (refer back to chapter INSTALLATION).	WATER IN THE CHAMBER AFTER THE CYCLE
Drying, after a cycle, is not satisfactory. ● check that the selected cycle complies with the material type to be sterilised (refer back to OPERATION) ● check that the total maximum load weight was not overcome (refer back to OPERATION) ● check that the load was correctly prepared (refer to chapter OPERATION – PREPARATION OF THE LOAD TO BE STERILISED) ● check the *air sterilising filter* ***15*** and possibly replace it (refer back to the chapter MAINTENANCE) ● Follow the instructions in the case of the previous problem.	INSATISFACTORY DRYING

Pressure, at the end of the cycle, rises very slowly. ● check the air *air sterilising filter* ***15*** and possibly replace it (refer back to the MAINTENANCE chapter)	SLOW INCREASING PRESSURE
The printer (optional) does not print. ● check the PRINTER = 1 programming information on the SETTING menu (refer back to the OPERATION chapter) ● check that there is enough paper and that the roller is correctly fitted (refer to the paragraph PRINTER, in the OPERATION chapter) and that the door is closed.	PRINTER NOT WORKING
The *water self charge* ***29*** (OPTIONAL) does not work. ● check the SELF CHARGE = 1 programming information on the SETTING menu (refer back to the OPERATION chapter) ● if configuration A from the external tank is set and programmed, check that there is enough water in the tank. If there is water and the alarm "CHECK SELF CHARGE" is on, check that the suction pipe is correctly positioned until the bottom of the tank; check that the pipe is not bent or twisted; check that the height difference between the autoclave and the tank bottom is no more than 1 meter (refer back to CONNECTIONS, chapter INSTALLATION). ● If configuration B from the water supply is set, check that the water supply tap is opened; if the tap is open and the alarm "CHECK SELF-FILLING" is activated, check that the water flow is present downstream the SPEEDY WATER demineralisation system. ● If none of the suggested remedies is effective, address a technical service centre and meanwhile set the SELF AUTOMATIC CHARGE (refer to SETTINGS, OPERATION chapter) and enforce a CLEAN WATER MANUAL CHARGE (refer to chapter INSTALLATION), to keep on using the autoclave	SELF WATER CHARGE NOT WORKING
Steam loss from the *safety valve* ***12***. ● if the autoclave is installed in a place whose altitude is higher than 1500 meters on the sea level, address a technical service centre to fit a suitable safety valve (refer to chapter TECHNICAL FEATURES) ● if the altitude is lower than 1500 meters on the sea level and the problem can not repeatedly be solved, address a technical service centre to check the valve efficiency.	STEAM LOSS FROM SAFETY VALVE

Alarm list codes

Code	Alarm type
00	TRIAC ALARM
01	OVER-TEMPERATURE ALARM
02	HEATING ALARM
03	INSUFFICIENT STEAM
04	INSUFFICIENT WATER LEVEL
05	free
06	MAXIMUM USED WATER LEVEL
07	OPEN DOOR OR NOT LOCKED
08	CHAMBER LEVEL ALARM
09	MANUAL STOP
10	INSUFFICIENT VACUUM
11	FRACTIONED VACUUM ALARM
12	free
13	LEVEL PROBE ALARM
14	PRESSURISATION ALARM
15	STERILISATION TEMPERATURE RANGE OVER ALARM
16	STERILISATION TEMPERATURE RANGE UNDER ALARM
17	PRINTER NOT READY
18	POWER FAILURE

GENERAL CONDITIONS

Any maintenance is to be carried out by qualified and technical trained personnel only.

Maintenance is to be carried out when the unit is not working, duly cut from the main power supply, if not differently specified.

Wait for the unit to be perfectly stopped, that there is no longer any surface excessively hot and in any case pay the due attention when operating the unit.

Avoid any unsafe repair. Repairs are to be carried out with original spare parts only.

Always wear individual protection means.

The operator must timely inform about any possible failure: dripping, wear, breaking and so on....

DO NOT allow the unit to be used in case of whatsoever problem and ask for the correct unit recovery under normal condition and in any case check that the unit conditions were recovered.

COMINOX is not liable at all in the case the specified maintenance plan is not correctly enforced (refer to the SCHEDULED MAINTENANCE table) as well as if maintenance is carried out by unskilled personnel or procedures suggested by the company own personnel are not enforced.

In case of failures which can not be solved simply referring to operating instructions address a COMINOX AUTHORISED TECHNICAL CENTRE.

Cleaning

Daily clean the sterilisation *chamber* ***09*** and the internal *door* ***16*** disk;
Use a cotton cloth soaked with alcohol or distilled water.

Daily

During cleaning, it is advisable to wear protection gloves.

In case of scales, use stainless steel polishing products, then remove any product residue with a degreaser and rinse with plenty distilled water.

NEVER use chlorine-based detergents (bleach) which could lead to oxidation inside the sterilisation chamber.
DO NOT use abrasive sponges or wools.

Daily clean the workplace, checking that there is no clogging at the unit ventilation and aeration level.

Daily

Clean the *clean water tank* ***10*** and *waste water recovery tank* ***11.*** Empty them at least every six months and then recharge the tank with clean water (refer back to the supply water table).
Should the unit not be used for a longer time period, leave the tanks empty.

Every Six months

Filters

Replace the *air sterilising filter* ***15*** at least every six months.

Every Six months

At last **yearly** check the *waste filter* ***20*** efficacy following the hereby described procedure:
- open the *door* ***16***;
- remove the filter from upward;
- check and clean the filter with a compressed air jet or replace it;
- position the new filter;

Yearly

Controls

At least **manually** check the *chamber seal* ***31*** efficacy, and if damaged, replace it.
To extend its life, it is better to leave the *door* ***16*** half-opened, and not locked through the handle, when the unit is not being used.

Monthly

Daily check that there are no breaks or dripping inside the workplace which could lead to dangerous slipping.

Daily

*At least **yearly** check the temperature and pressure probe adjusting.*
*The probe control is only to be carried out by qualified personnel or by a **COMINOX** AUTHORISED TECHNICAL SERVICE CENTRE.*

Yearly

STORAGE AND DISPOSAL

Unit storage or long-term stop

Should the unit NOT be used for a long time and stored for a long time period, check that it is correctly packed.

Storage only in closed, well ventilated rooms, under consistent conditions to avoid damaging the unit components, especially the electronic components.

If necessary, cover the unit with a plastic layer and fit dehydrated salts.
NEVER lean any different unit on the packaging and in any case do not pile up more than 4 cases or crates.

In the case the unit is not used for a long time period, it needs to be specifically controlled. Ask for the specific instructions to **COMINOX** or to an AUTHORISED TECHNICAL SERVICE CENTRE.

When the unit is not used for a long time period, completely empty the tanks.

Disposal and Scrapping

Should the unit be dismantled, to correctly dispose of its different parts, comply with regulations in force in each single country. However avoid polluting.

ATTENTION: **COMINOX** is not liable at all in the case of damages to the systems used for the unit disposal or used for its operation.

Disposal of the different materials the unit consists of in special authorised landfills.

SCHEDULED SERVICE TABLE

Replaced fitting or fitting to be replaced	N° of cycles or admitted maximum time	Maintenance date N° of cycles when service was enforced Seal Technician signature			
Air filter	500 1 year				
By-Pass solenoid valve	1500 2 years				
Drain solenoid valve	1500 2 years				
Vacuum pump kit	1500 2 years				
Tanks level probes	1500 2 years				
Door seal	6000 6 years				
Liquid inlet pump	6000 6 years				
Internal coil	6000 6 years				
Chamber level probe	6000 6 years				
Temperature probe	6000 6 years				
Safety thermostat	6000 6 years				
Pressure transducer	6000 6 years				
Safety valve	6000 6 years				
Cooling fan	6000 6 years				

SCHEDULED SERVICE TABLE

Service date
N° of cycles when the service was enforced
Seal
Technician signature